HM55_CP (ZRD) SYSTEM BLOCK DIAGRAM

BOM Option Table

Reference	Description
IV@	for UMA only SKU
SW@	for Switchable Graphic only SKU

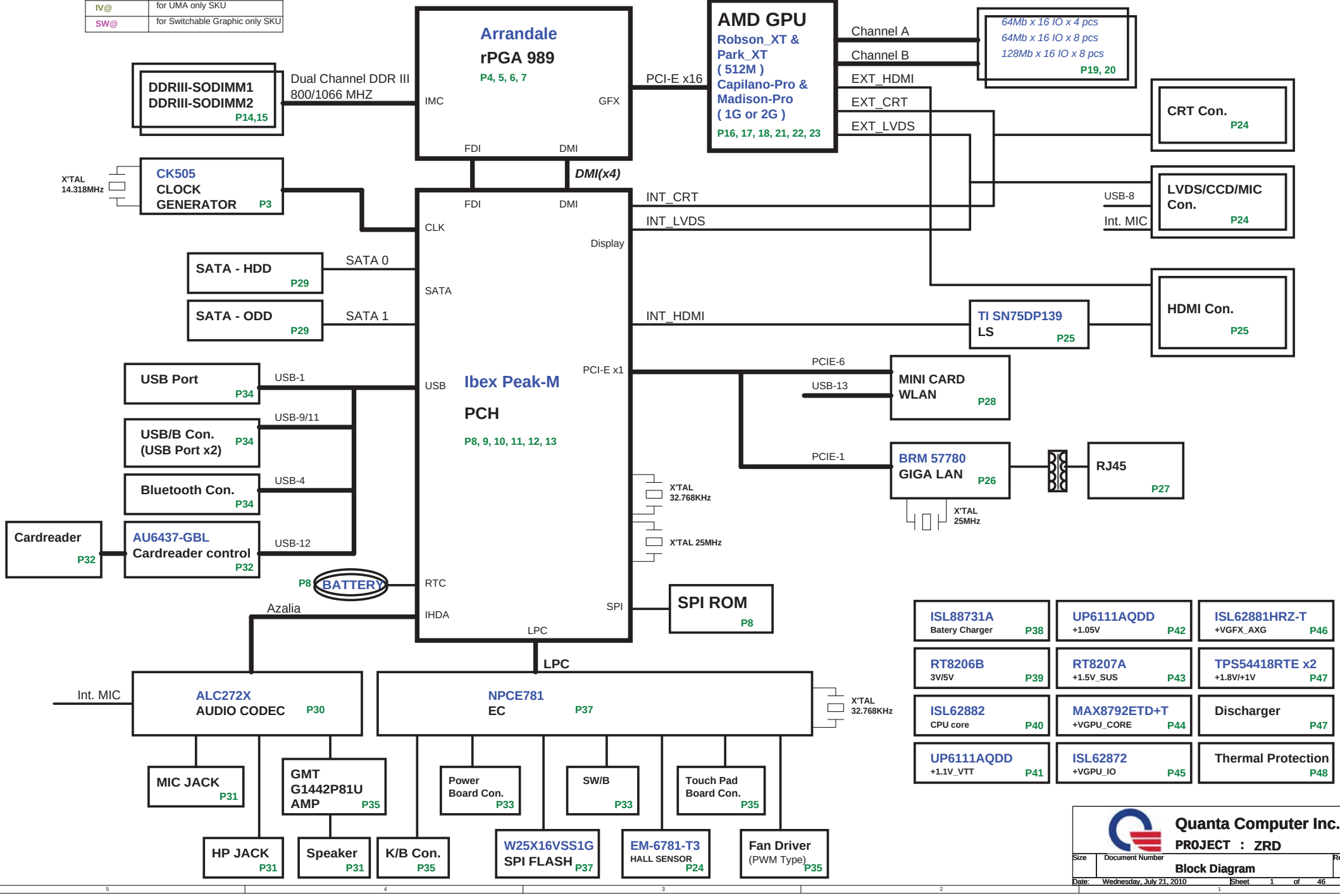

Quanta Computer Inc.

PROJECT : ZRD

Size	Document Number	Rev
	Block Diagram	1C

Date: Wednesday, July 21, 2010 Sheet 1 of 46

GPU PWR CTRL Option 1 (Default/ VDDR3 before VDDC)

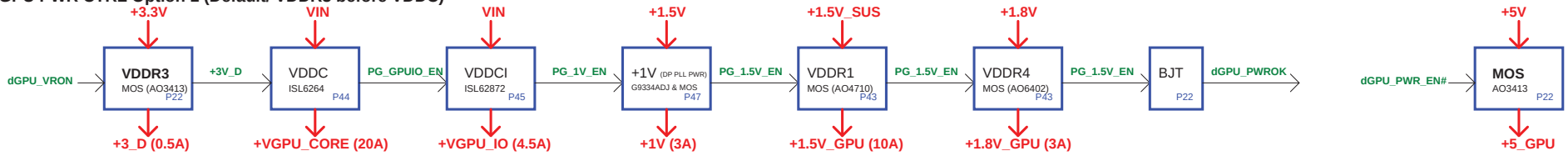

GPU PWR CTRL Option 2 (VDDR3 after VDDR1)

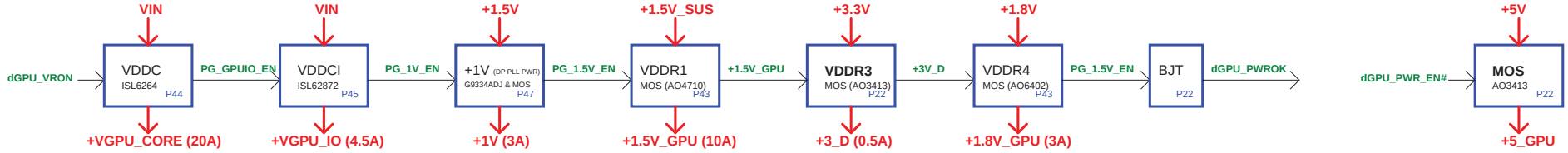

Power States

POWER PLANE	VOLTAGE	DESCRIPTION	CONTROL SIGNAL	ACTIVE IN
VIN	+10V~+19V	MAIN POWER	ALWAYS	ALWAYS
+VCCRTC	+3V~+3.3V	RTC POWER	ALWAYS	ALWAYS
+3VPCU	+3.3V	EC POWER	ALWAYS	ALWAYS
+5VPCU	+5V	CHARGE POWER	ALWAYS	ALWAYS
+15V	+15V	CHARGE PUMP POWER	ALWAYS	ALWAYS
+3V_S5	+3.3V	LAN/BT/CIR POWER	S5_ON	S0-S5
+5V_S5	+5V	USB POWER	S5_ON	S0-S5
+5V	+5V	HDD/ODD/Codec/TP/CRT/HDMI POWER	MAINON	S0
+3V	+3.3V	PCH/GPU/Peripheral component POWER	MAINON	S0
+1.5VSUS	+1.5V	CPU/SODIMM CORE POWER	SUSON	S0-S3
+0.75V_DDR_VTT	+0.75V	SODIMM Termination POWER	MAINON	S0
+VGFX_AXG	variation	Internal GPU POWER	GFX_ON	S0
+1.8V	+1.8V	CPU/PCH/Braidwood POWER	MAINON	S0
+1.5V	+1.5V	MINI CARD/NEW CARD POWER	MAINON	S0
+1.1V_VTT	+1.05V or +1.1V	CPU VTT POWER	MAINON	S0
+1.05V	+1.05V	PCH CORE POWER	MAINON	S0
+VCC_CORE	variation	CPU CORE POWER	VRON	S0
LCDVCC	+3.3V	LCD POWER	LVDS_VDDEN	S0
+5V_GPU	+5V	SWITCHABLE PWM IC POWER	dGPU_PWR_EN#	Discrete enable
+GPU_CORE	+0.9V~+1.1V	GPU CORE POWER	+3V_D	Discrete enable
+GPU_IO	+0.9V~+1.1V	GPU I/O POWER	PG_GPUIO_EN	Discrete enable
+1.5V_GPU	+1.5V	VRAM CORE POWER	PG_1.5V_EN	Discrete enable
+1.8V_GPU	+1.8V	GPU_CRE/LVDS/PLL POWER	+1.5V_GPU	Discrete enable
+1V	+1V	DP/PEG POWER	PG_1V_EN	Discrete enable

Thermal Follow Chart

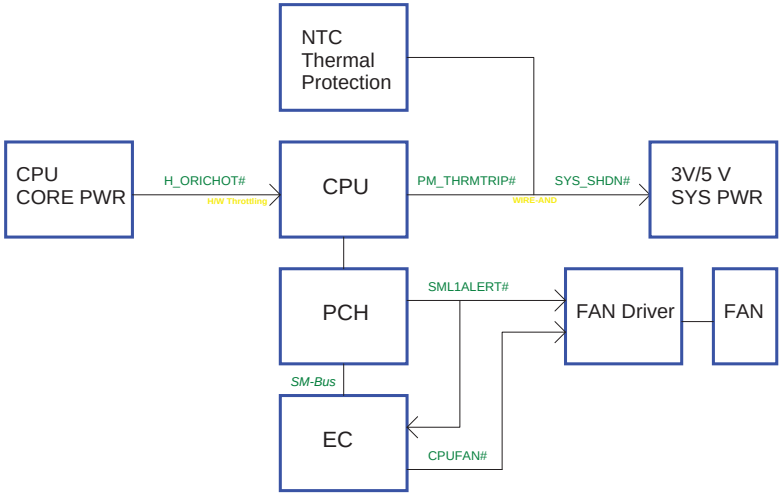

Quanta Computer Inc.

PROJECT : ZRD

Size	Document Number	Rev
	PWR Status & GPU PWR CRL & THRM	1C

Date: Wednesday, July 21, 2010 Sheet 2 of 46

6/21 add R586 for 3V CLK gen
Un-stuff L54
U31 Change P/N

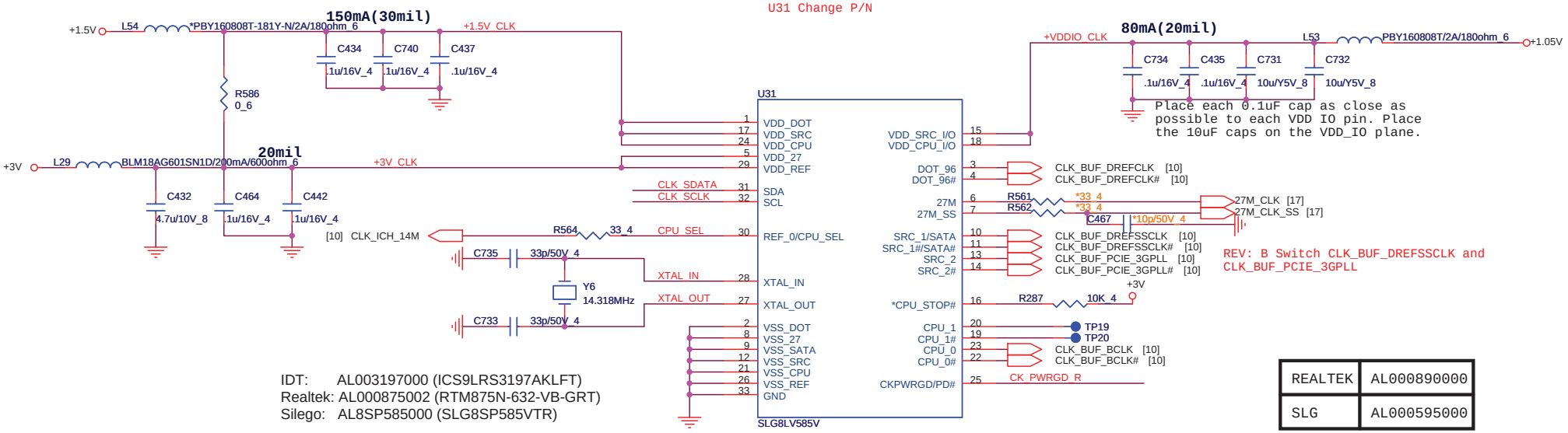

REV: B Switch CLK_BUF_DREFSSCLK and CLK_BUF_PCIE_3GPLL

IDT: AL003197000 (ICS9LRS3197AKLFT)
Realtek: AL000875002 (RTM875N-632-VB-GRT)
Silego: AL8SP585000 (SLG8SP585VTR)

REALTEK	AL000890000
SLG	AL000595000

CPU_CLK select

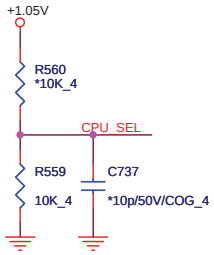

	0	1
CPU_SEL	CPU0/1=133MHz (default)	CPU0/1=100MHz

SMBus

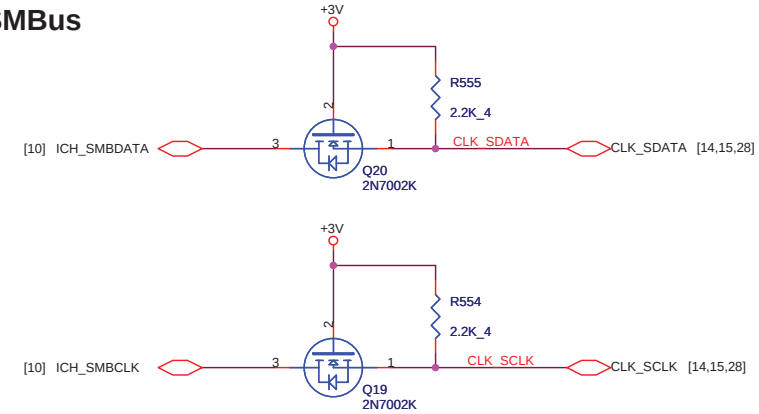

CLK Enable

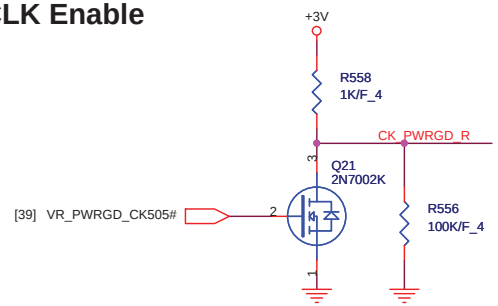

Quanta Computer Inc.
PROJECT : ZRD

Size	Document Number	Rev
	Clock Generator	1C

Date: Wednesday, July 21, 2010 Sheet 3 of 46

AUBURNDALE/CLARKSFIELD PROCESSOR (DMI,PEG,FDI)

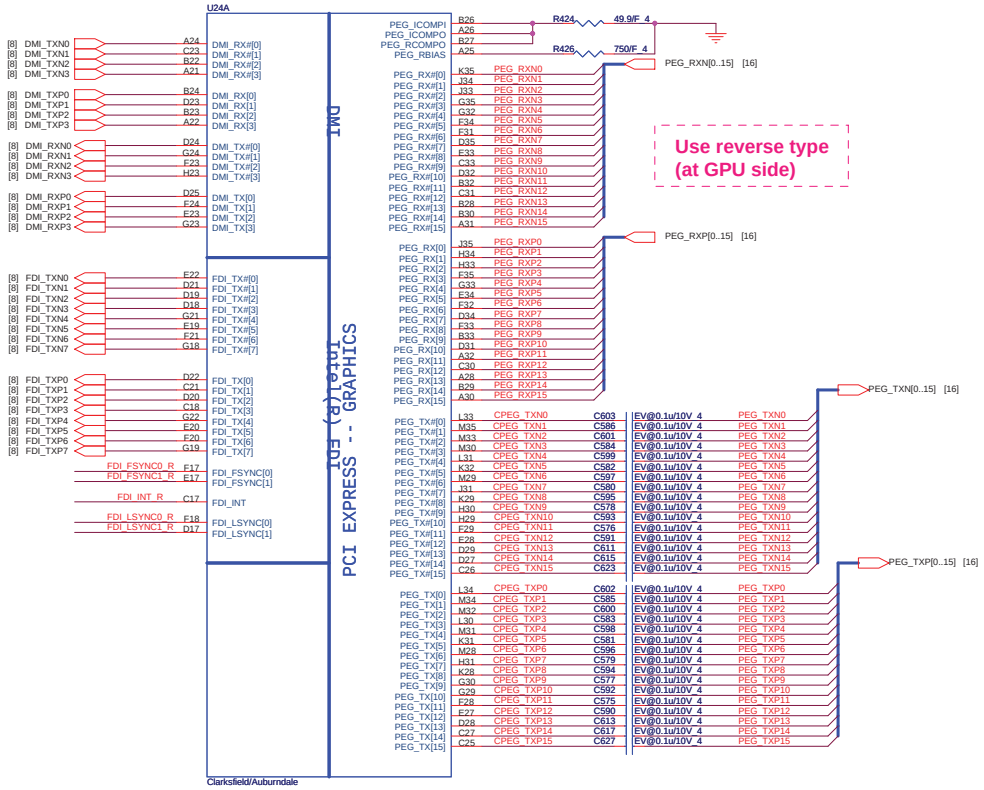

AUBURNDALE/CLARKSFIELD PROCESSOR (CLK,MISC,JTAG)

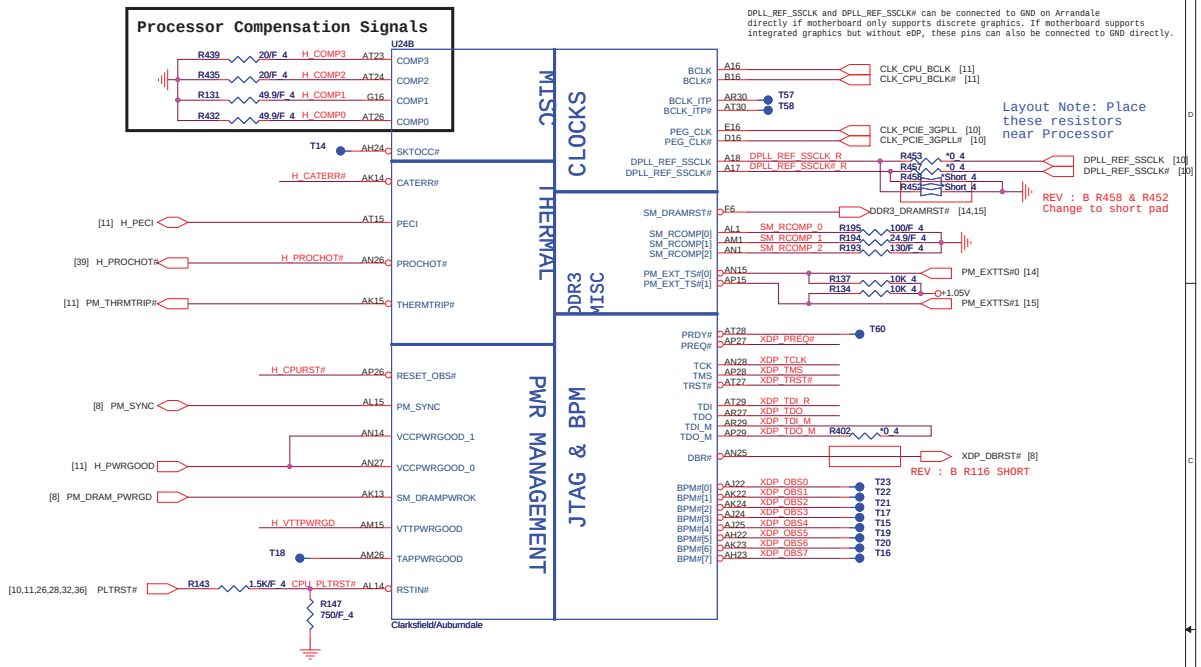

LTS	DGG^9000005
SUY	DGG^9000016
FOX	DGG^9000023

Thermaltrip protect

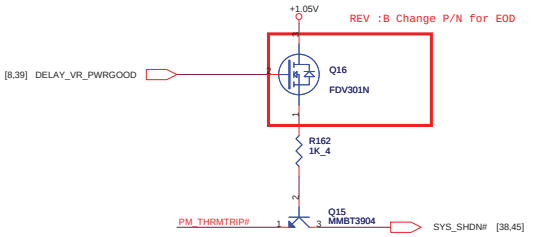

VTT PWR_Good

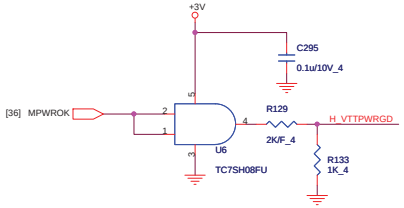

Processor pull-up

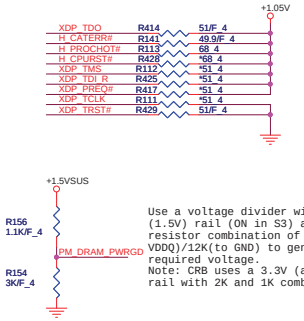

Use a voltage divider with VDDQ (1.5V) rail (ON in S3) and resistor combination of 4.75K (to VDDQ)/12K(to GND) to generate the required voltage.
Note: CRB uses a 3.3V (always ON) rail with 2K and 1K combination.

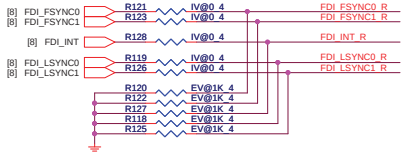

<The GFX_IMON, FDI_FSYNC[0], FDI_FSYNC[1], FDI_LSYNC[0], FDI_LSYNC[1], and FDI_INT>Note that if these signals are left as no connect, there are no functional impacts, but a small amount of power (~15 mW) maybe wasted.

Quanta Computer Inc.

PROJECT : ZRD

Size	Document Number	Rev
	AUBURNDA 1/4	1C

Date: Wednesday, July 21, 2010 Sheet 4 of 46

AUBURNDALE/CLARKSFIELD PROCESSOR (DDR3)

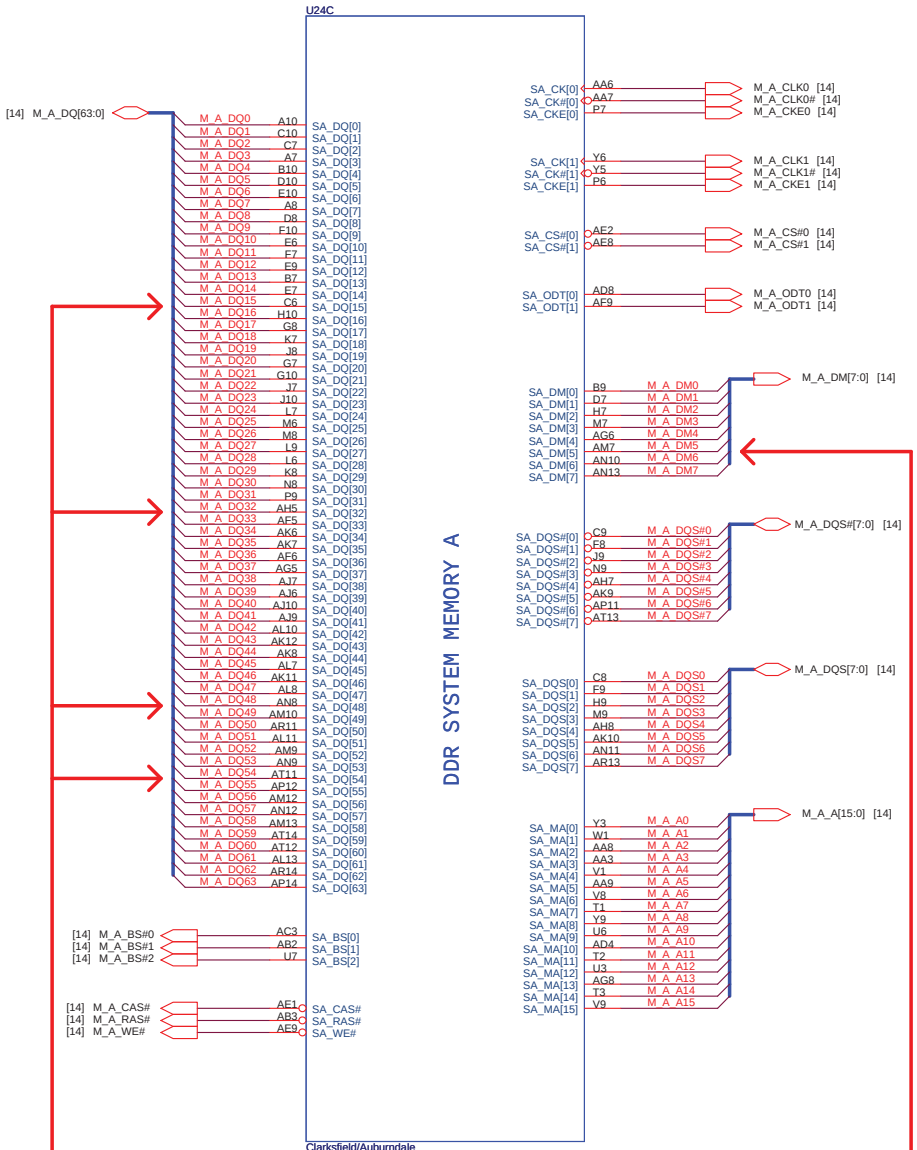

Channel A DQ[15,32,48,54], DM[5]
Requires minimum 12mils spacing
with all other signals, including data signals.

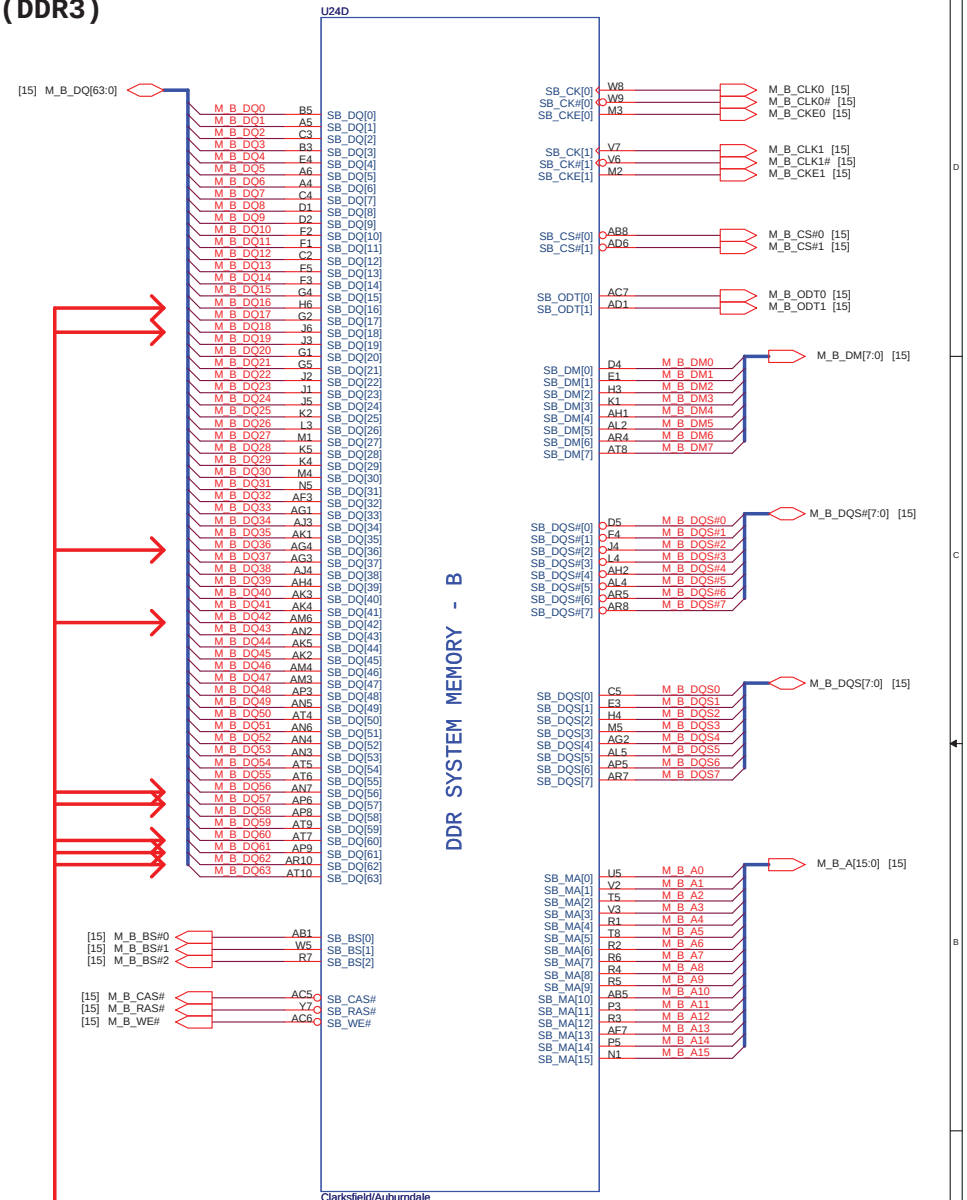

Channel B DQ[16,18,36,42,56,57,60,61,62]
Requires minimum 12mils spacing
with all other signals, including data signals.

Quanta Computer Inc.			
PROJECT : ZRD			
Size	Document Number		Rev
	AUBURNDA 2/4		1C
Date: Wednesday, July 21, 2010	Sheet 5 of 46		

AUBURNDALE/CLARKSFIELD PROCESSOR (GRAPHICS POWER)

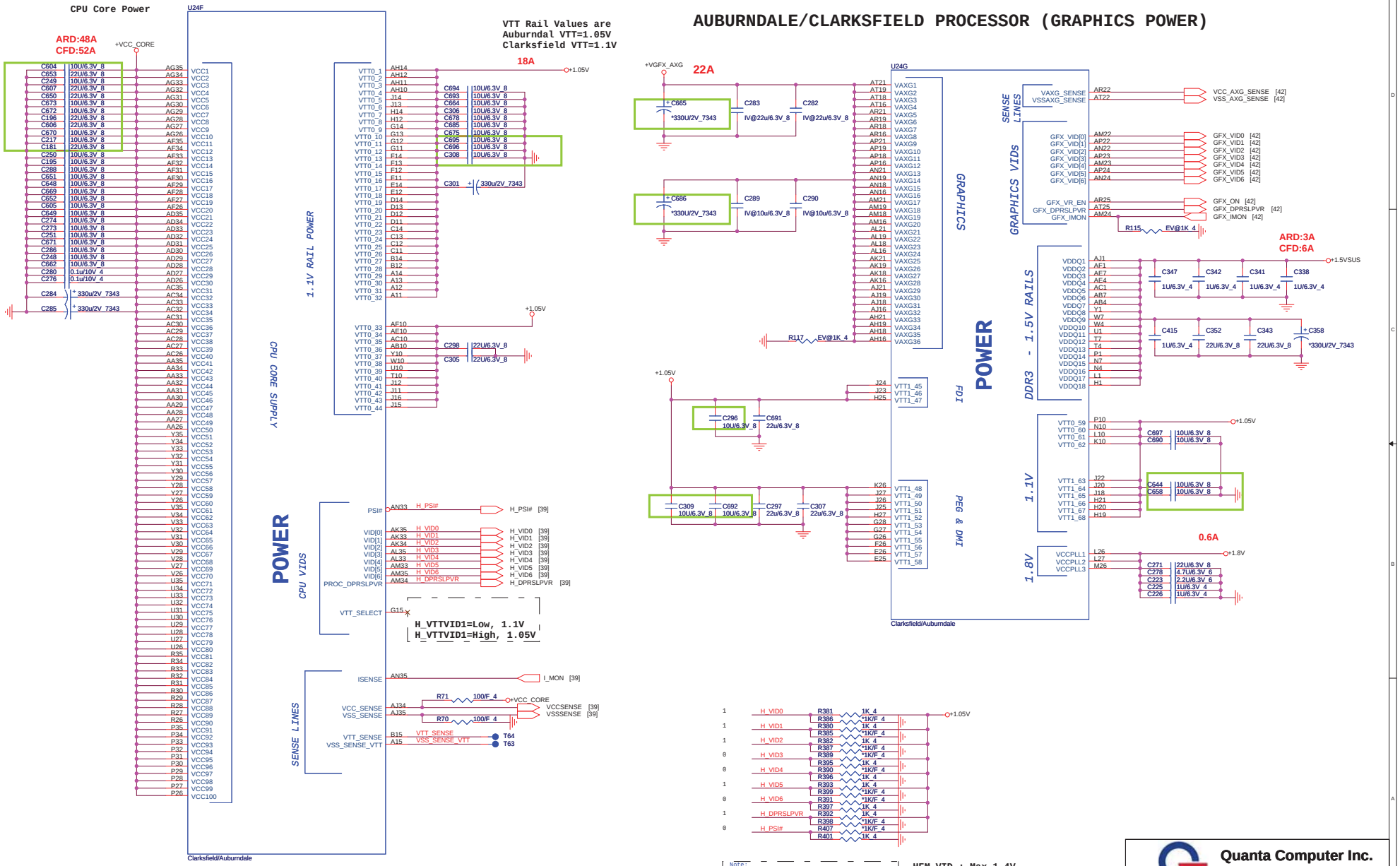

AUBURNDALE/CLARKSFIELD PROCESSOR (POWER)

Note:
For Validating IMVP VR R6451 should be STUFF
and R2N1 NO_STUFF

HFM_VID : Max 1.4V
LFM_VID : Min 0.65V

Quanta Computer Inc.
PROJECT : ZRD

Size	Document Number	Rev
	AUBURNDA 3/4 (PWR)	1C

Date: Wednesday, July 21, 2010 Sheet 6 of 46

AUBURNDALE/CLARKSFIELD PROCESSOR (GND)

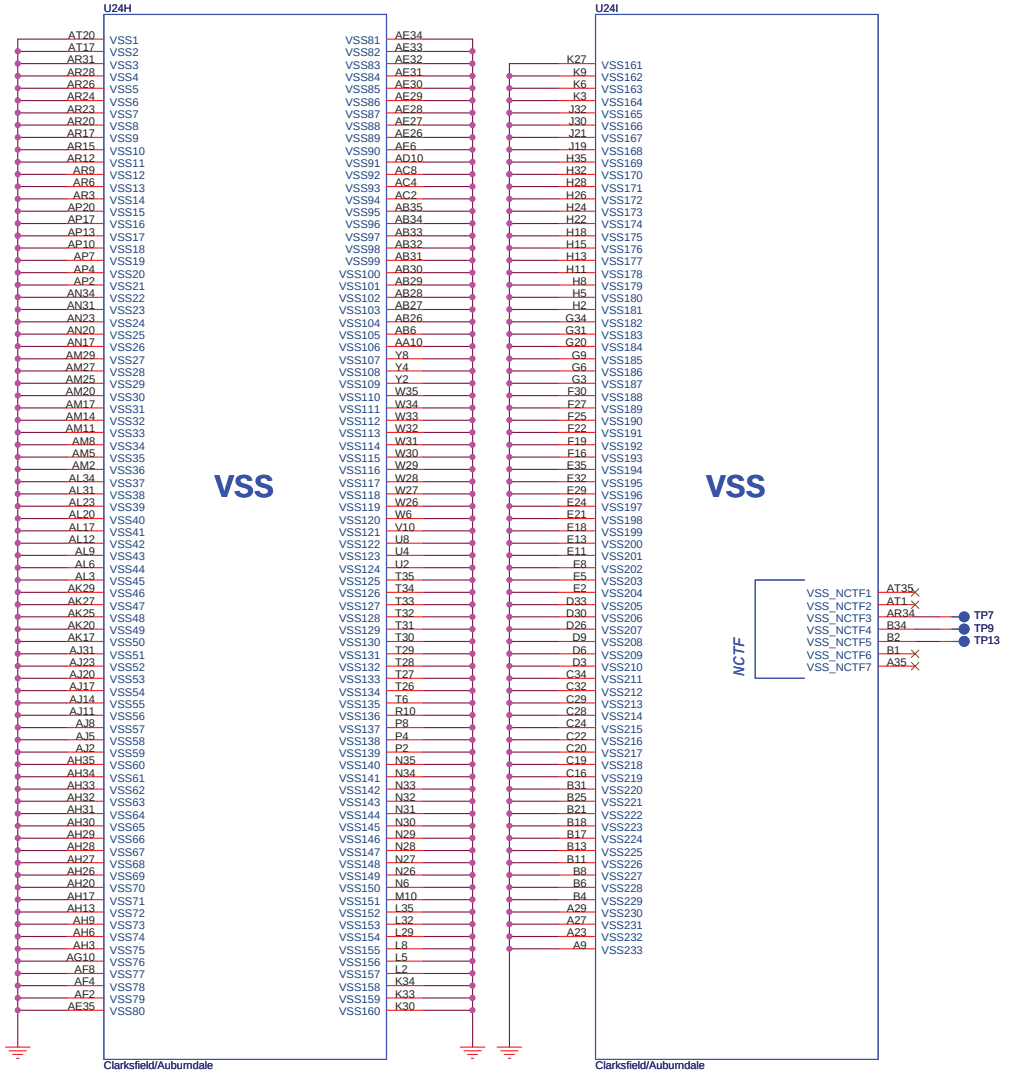

AUBURNDALE/CLARKSFIELD PROCESSOR(RESERVED, CFG)

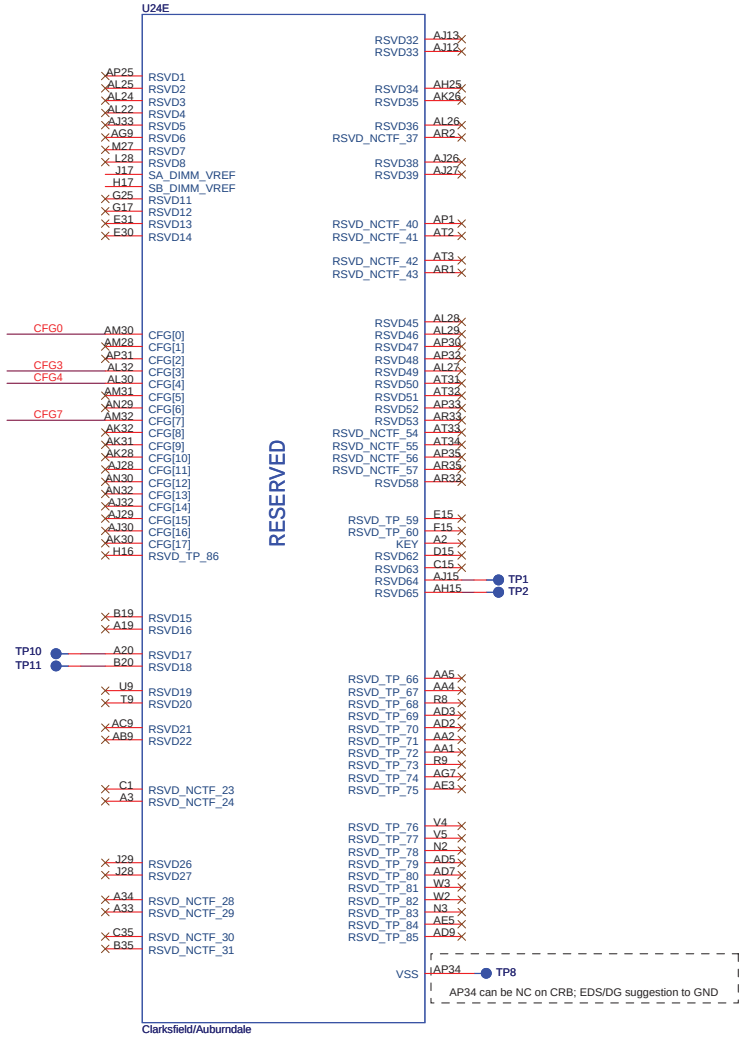

Processor Strapping

	1	0	DEFAULT	
CFG0 (PCI-Epress Configuration Select)	Single PEG	Bifurcation enabled	1	CFG0 R110 *3.01K_NC
CFG3 (PCI-Epress Static Lane Reversal)	Normal Operation	Lane Numbers Reversed	1	CFG3 R102 3.01K/F_4
CFG4 (Embended Display Port Presence)	Disabled; No Physical Display Port attached to Embedded Diplay Port	Enabled; An external Display port device is connected to the Embedded Display port	1	CFG4 R109 *3.01K
The Clarkfield processor's PCI Express interface may not meet PCI Express 2.0 jitter specifications. Intel recommends placing a 3.01K +/- 5% pull down resistor to VSS on CFG[7] pin for both rPGA and BGA components. This pull down resistor should be removed when this issue is fixed.				CFG7 R103 *3.01K/F_4

Quanta Computer Inc.

PROJECT : ZRD

Size	Document Number	Rev
	AUBURNDA 4/4	1C

Date: Wednesday, July 21, 2010 Sheet 7 of 46

IBEX PEAK-M (DMI,FDI,GPIO)

0-ohm resistor place close to PCH

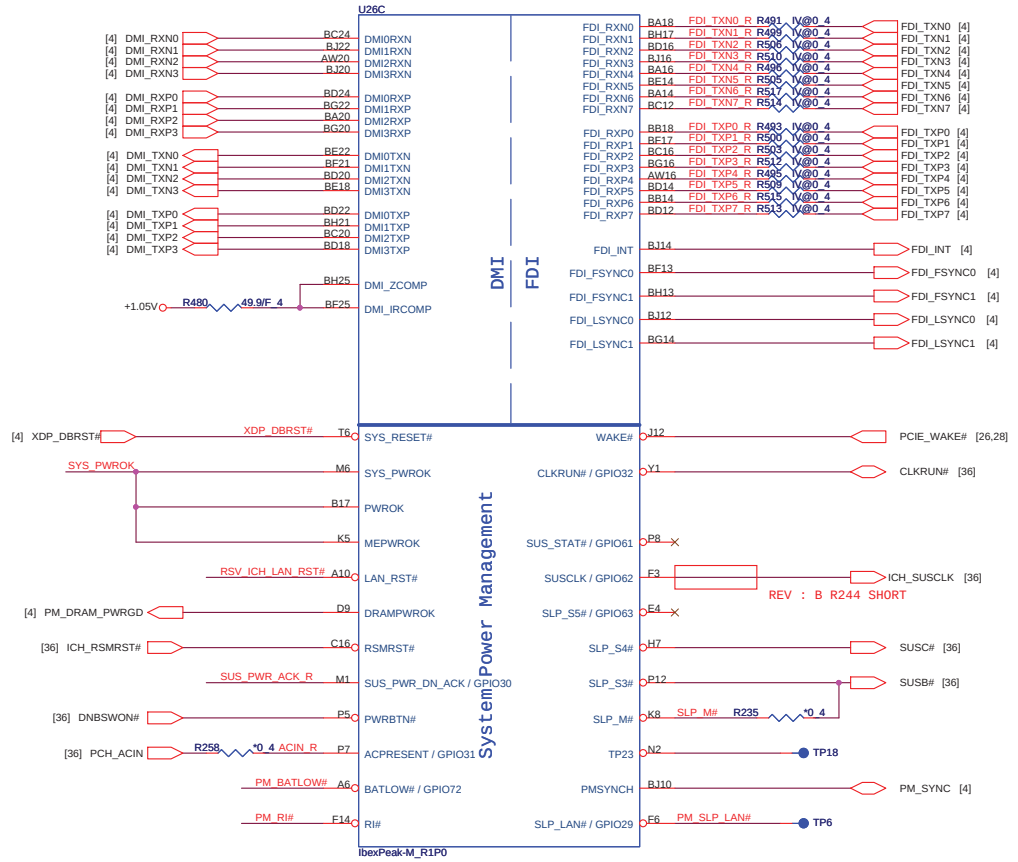

AC-coupling CAP place close to PCH

IBEX PEAK-M (LVDS,DDI)

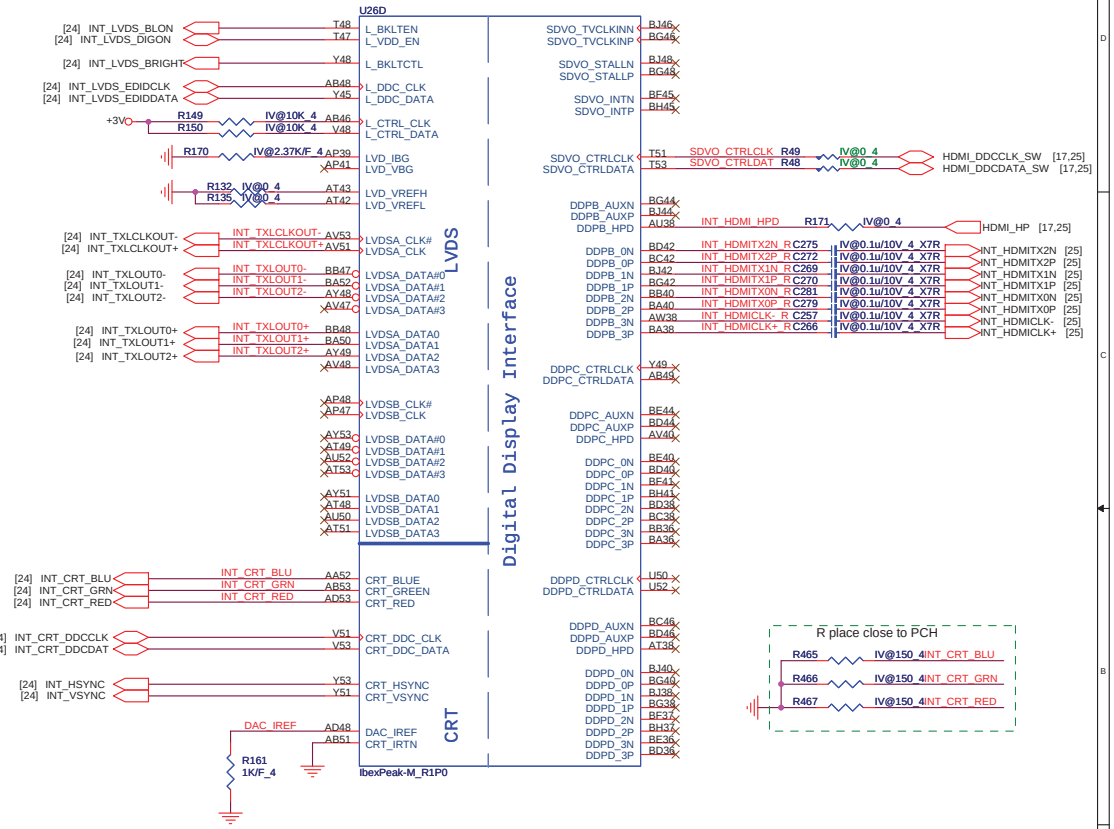

PCH Pull-high/low

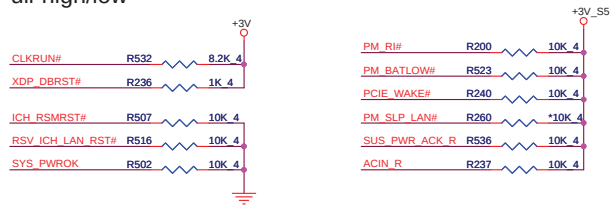

System PWR_OK

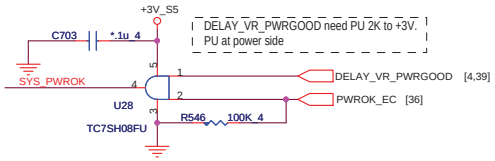

Quanta Computer Inc.

PROJECT : ZRD

Size	Document Number	Rev
	IBEX PEAK-M 1/6	1C

Date: Wednesday, July 21, 2010 Sheet 8 of 46

RTC Circuitry

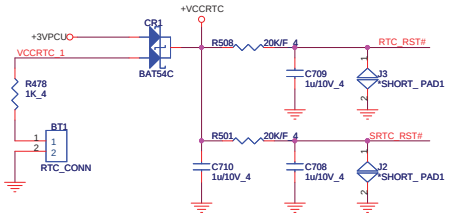

HDA Bus

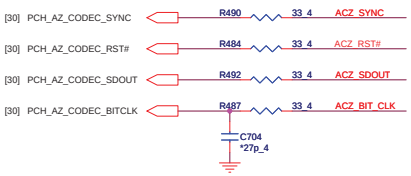

PCH SPI

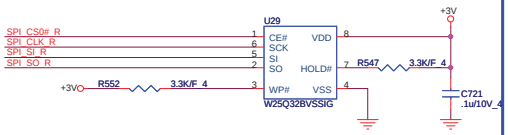

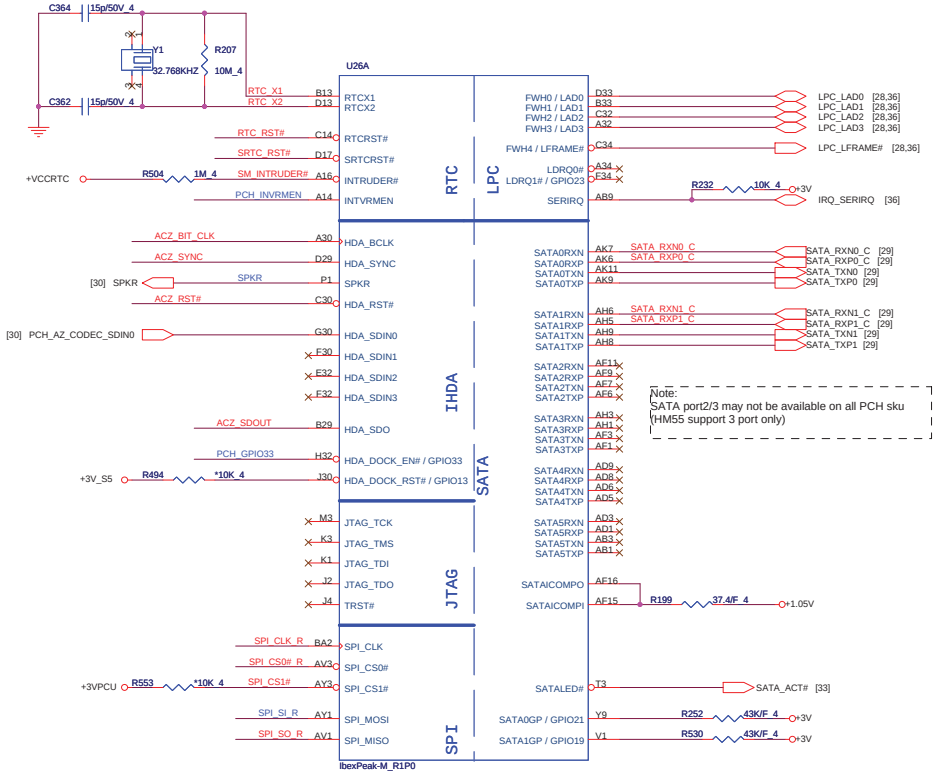

PCH Strap Pin Configuration Table-1

INTVRMEN	Integrated 1.05V VRM Enable / Disable	1 = Integrated VRM is enabled 0 = Integrated VRM is disabled	+VCCRTC R511 330K_6 PCH_INVRMEN
SPI_MOSI	TPM Functionality Disable	1 = Enabled 0 = Disable	+3V R551 *1K_4 SPI_SI_R
SPKR	Reboot option at power-up	0 = Default Mode (Internal weak Pull-down) 1 = No Reboot Mode with TCO Disabled	+3V R538 *1K/F_4 SPKR
HDA_DOCK_EN #/GPIO33	Flash Descriptor Security Override	0 = Flash Descriptor Security will be overridden 1 = Security measure defined in the Flash Descriptor will be enabled.	PCH_GPIO33 J1 1 2 *SHORT_PAD1
GNT0#, GNT1#	Boot BIOS Strap	(0,0) = LPC (0,1) = Reserved NAND (1,0) = PCI (1,1) = SPI	[10] PCI_GNT0# [10] PCI_GNT1# R158 1K_4 R152 1K_4 R153 *1K_4 R159 *1K_4 +3V
GNT2#/ GPIO53	ESI Strap (Server Only)	ESI compatible mode is for server platforms only	[10] PWM_SELECT# R182 *1K/F_4
GNT3#/ GPIO55	Top-Block Swap Override	0 = Top Block Swap Mode 1 = Default Mode (Internal pull-up)	[10] PCI_GNT3# R462 *10K/F_4
NV_ALE	IntelR Anti-Theft Technology HDD Data Protection (Intel AT-d) Enable	1 = Enabled 0 = Disabled (Default)	[10] NV_ALE R213 *1K/F_4 +1.8V
NV_CLE	DMI Termination Voltage	DMI termination voltage. Weak internal pull-up. Do not pull low.	[10] NV_CLE R216 *1K/F_4 +1.8V

GPIO8	Reserved	This signal has a weak internal pull up. NOTE: This signal should not be pulled low	[11] RSV_GPIO8 R215 10K_4 +3V_S5 R214 *1K_4
GPIO15	Reserved	0 = Intel ME Crypto Transport Layer Security (TLS) cipher suite with no confidentiality 1 = Intel ME Crypto Transport Layer Security (TLS) cipher suite with confidentiality	[11] CR_WAKE# R256 1K_4 +3V_S5
GPIO27	On-Die PLL Voltage Regulator <internal weak pull-up>	0 = Disables the VccVRM. 1 = Enables the internal VccVRM to have a clean supply for analog rails.	[11] PCH_GPIO27 R231 *10K_4

Quanta Computer Inc.
PROJECT : ZRD

Size	Document Number	Rev
	IBEX PEAK-M 2/6	1C

Date: Wednesday, July 21, 2010 Sheet 9 of 46

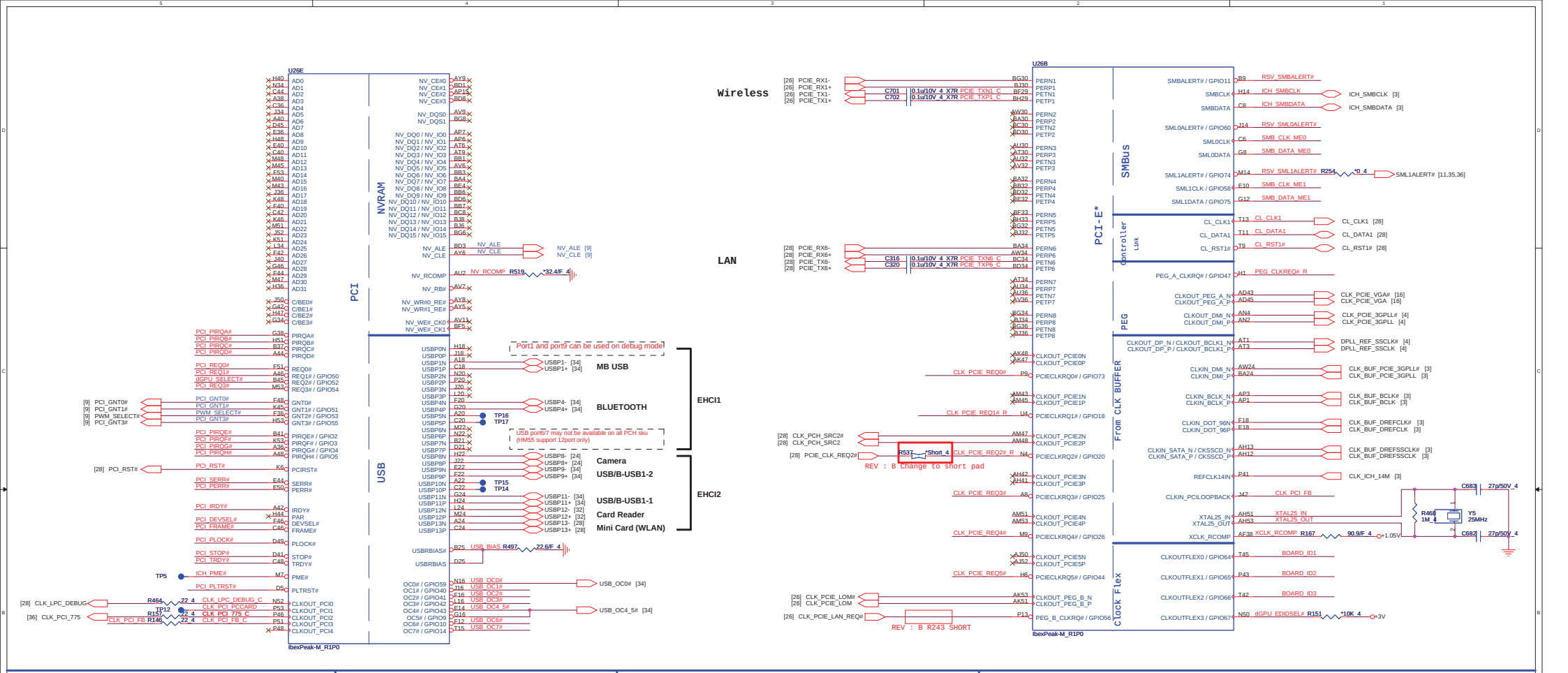
U26E
PCI
NVRAM
USB
IbexPeak-M_R1P0
U26B
PCI-E*
SMBUS
Controller Link
PEG
From CLK BUFFER
Clock Flex
Wireless
LAN
EHCI1
EHCI2
MB USB
BLUETOOTH
Camera
USB/B-USB1-2
USB/B-USB1-1
Card Reader
Mini Card (WLAN)
Port1 and port9 can be used on debug mode
USB port6/7 may not be available on all PCH sku (HM55 support 12port only)
REV : B Change to short pad
REV : B R243 SHORT
R163 stuff/R442 non stuff for SMT debug
BOARD_ID1 High = Capitano Low = Madsion or other GPUs
BOARD_ID2 High = 80port output to LPC Low = 80port output to PCI
BOARD_ID3 High = Reserved Low = Reserved (Default)
Quanta Computer Inc.
PROJECT : ZRD
Size
Document Number
IBEX PEAK-M 3/6
Rev 1C
Date: Wednesday, July 21, 2010
Sheet 10 of 46

IBEX PEAK-M (GPIO,VSS_NCTF,RSVD)

GPU RST#

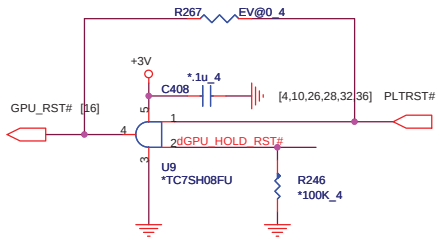

GPIO Pull-up/Pull-down

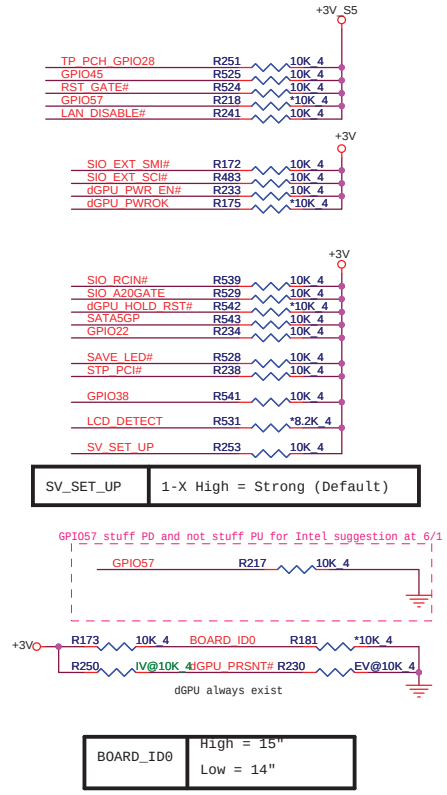

SV_SET_UP	1-X High = Strong (Default)

BOARD_ID0	High = 15" Low = 14"

Quanta Computer Inc.

PROJECT : ZRD

Size	Document Number	Rev
	IBEX PEAK-M 4/6	1C

Date: Wednesday, July 21, 2010 Sheet 11 of 46

IBEX PEAK-M (POWER)

3.3 V. This rail should be powered up during S0 system state.
Note that Thermal Sensor shares the same power supply rail with DAC.
The external filters on this pin are not needed in case internal graphic is disabled so only 3.3-V connection is required.

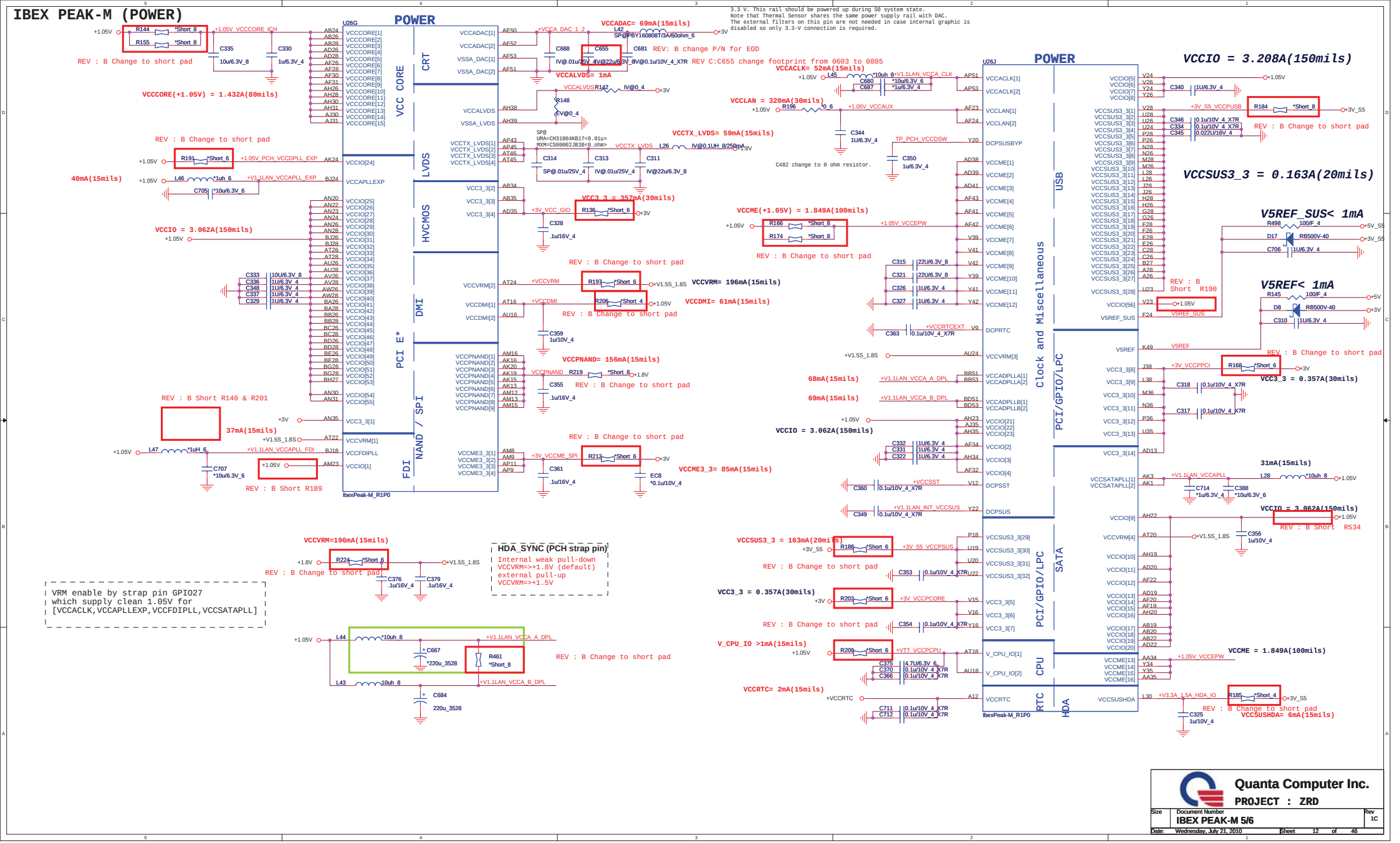

Quanta Computer Inc.	
PROJECT : ZRD	
Size	Document Number: IBEX PEAK-M 5/6
Rev	1C
Date: Wednesday, July 21, 2010	Sheet 12 of 46

IBEX PEAK-M (GND)

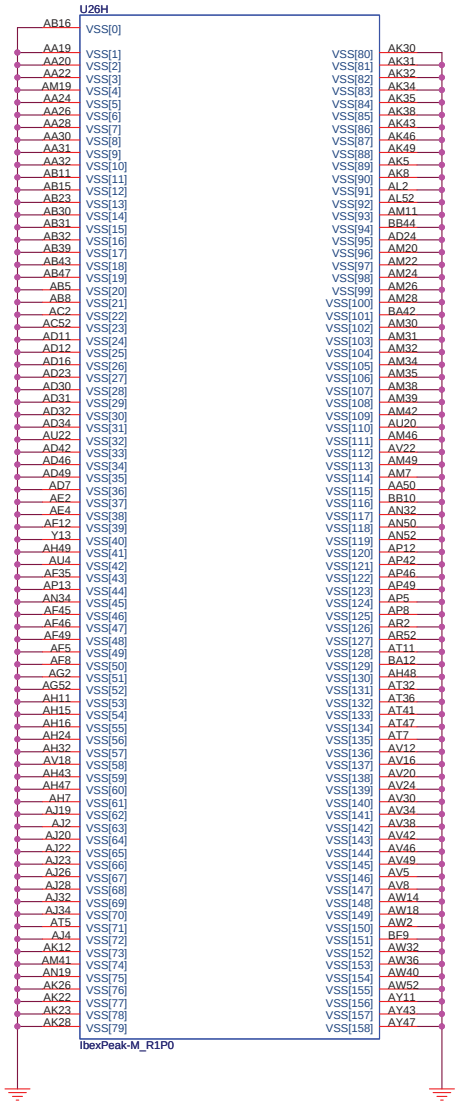

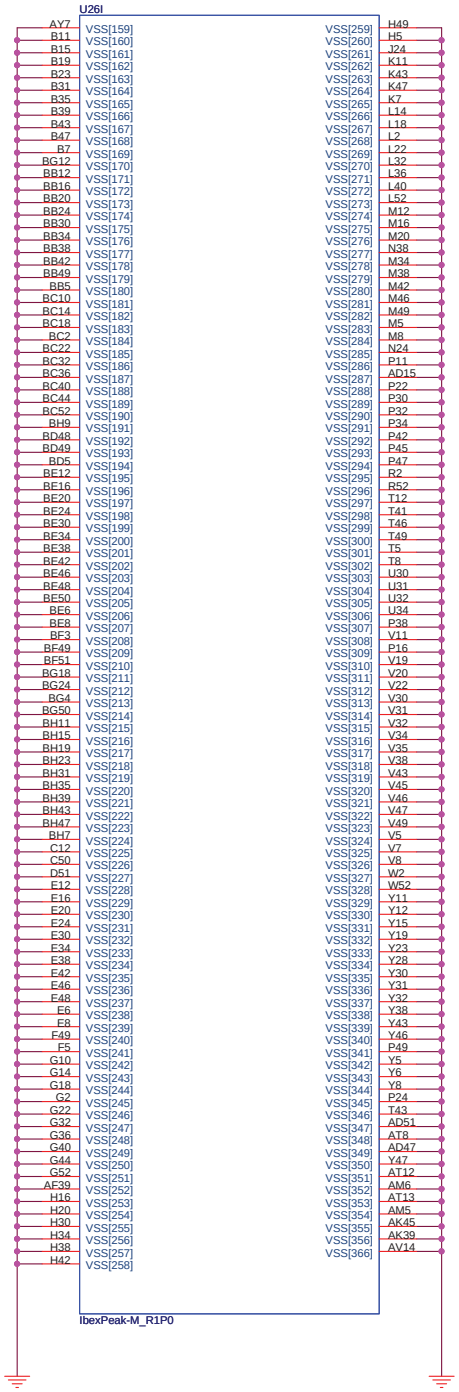

Quanta Computer Inc.

PROJECT : ZRD

Size	Document Number	Rev
	IBEX PEAK-M 6/6	1C

Date: Wednesday, July 21, 2010 Sheet 13 of 46

LTK	DGMK4000087
SUY	DGMK4000073

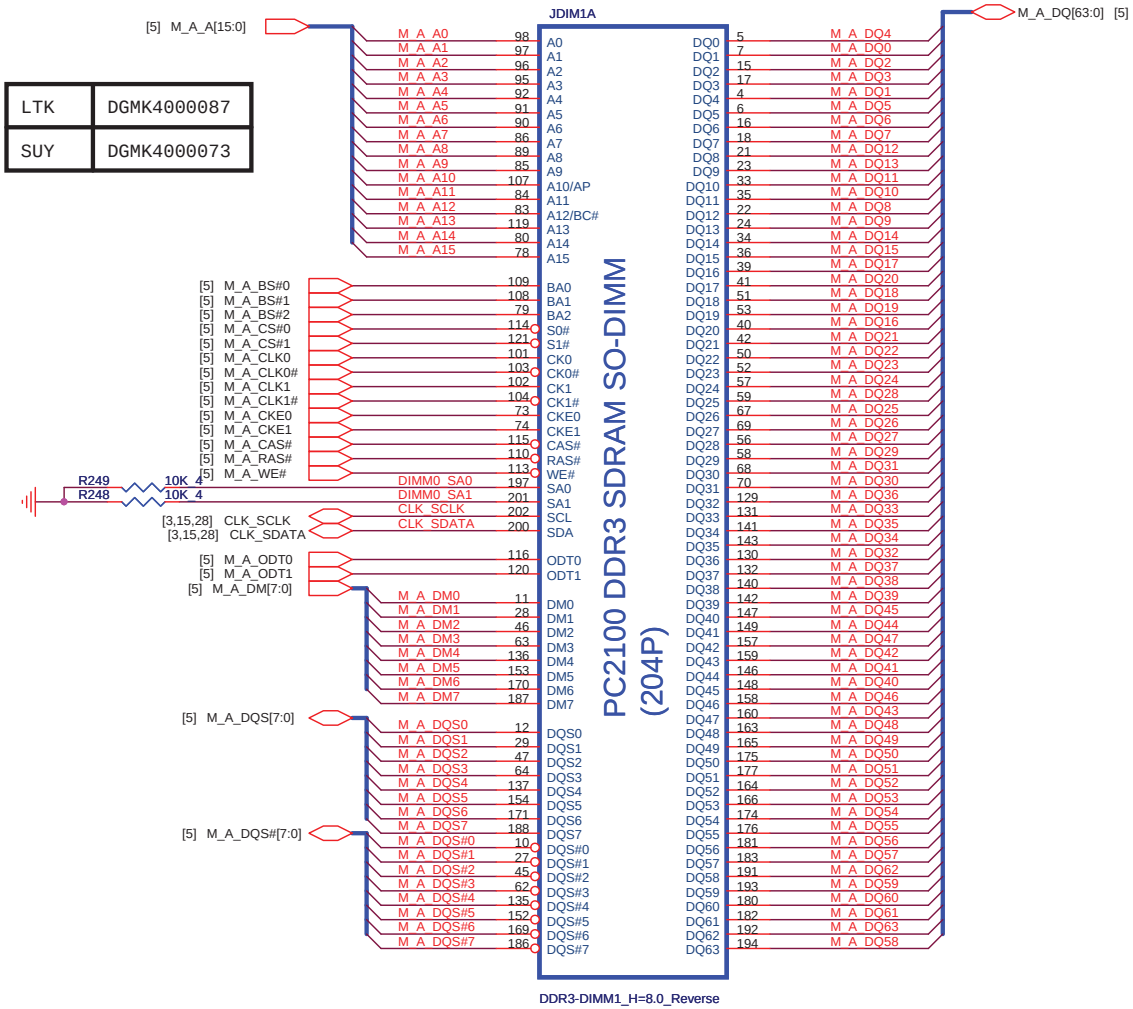

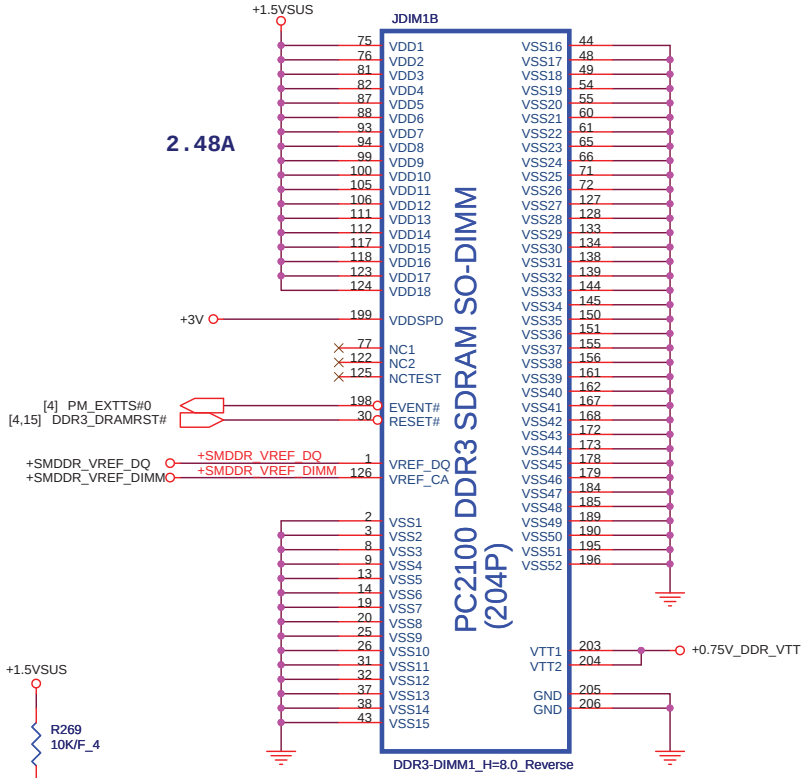

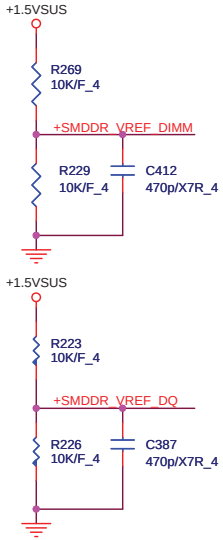

Place these Caps near So-Dimm0.

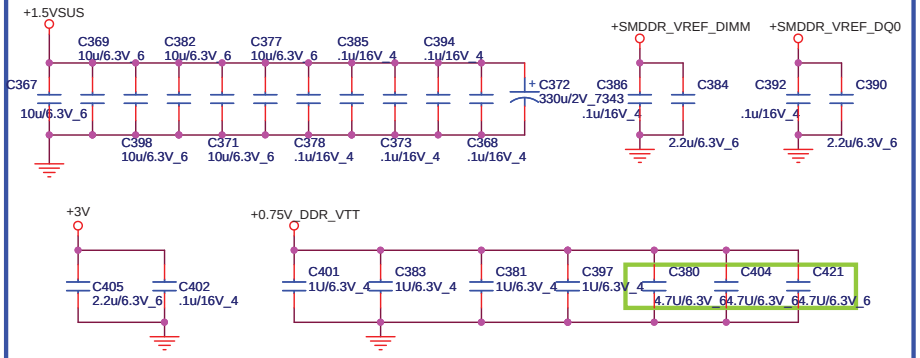

Quanta Computer Inc.

PROJECT : ZRD

Size	Document Number	Rev
	DDRIII SO-DIMM-0	1C

Date: Wednesday, July 21, 2010 Sheet 14 of 46

LTK	DGMK4000005
MOLEX	DGMK4000010

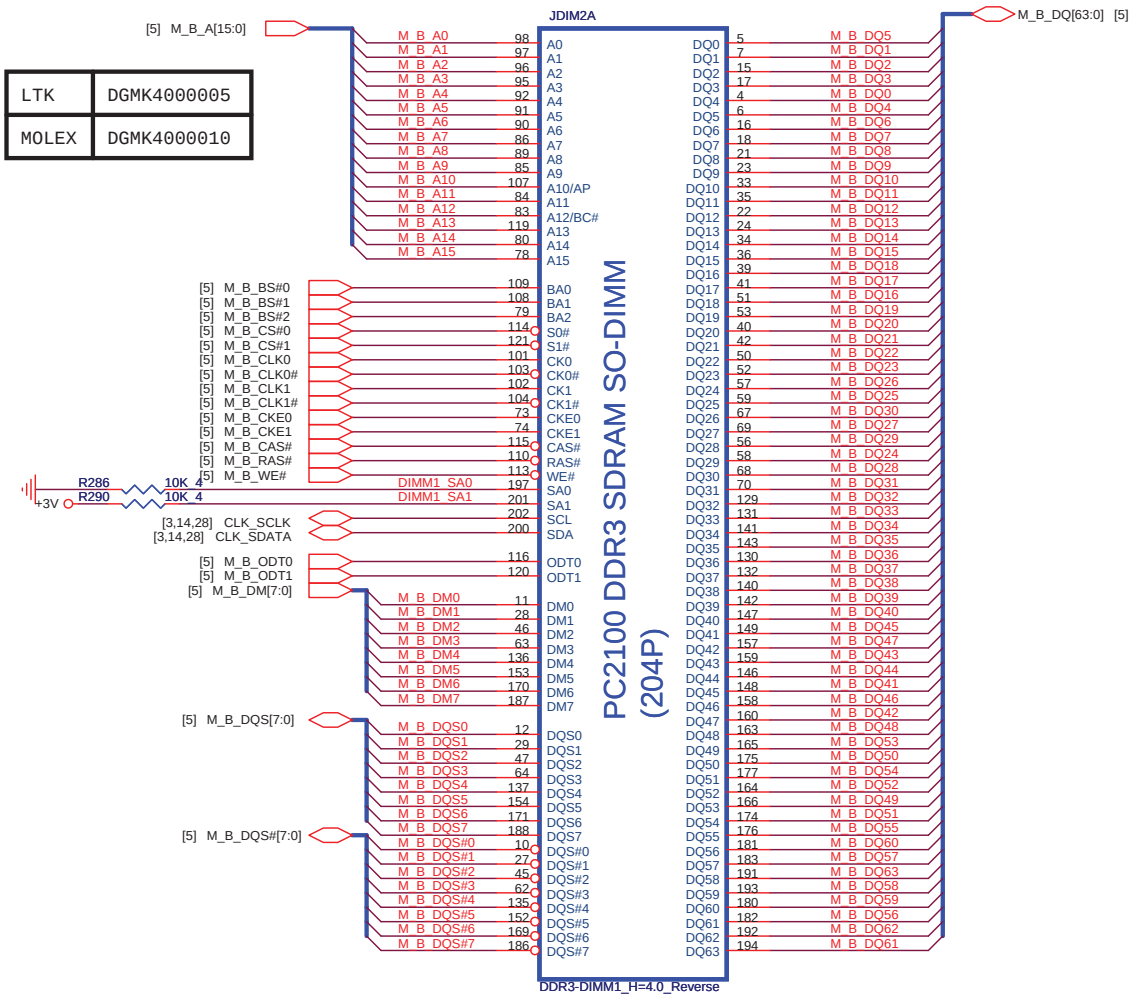

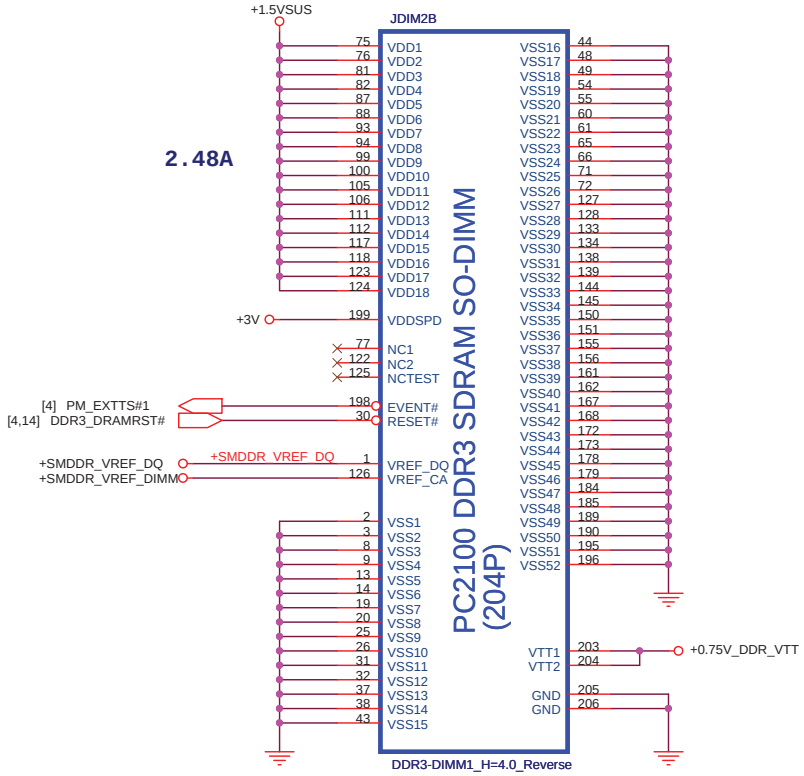

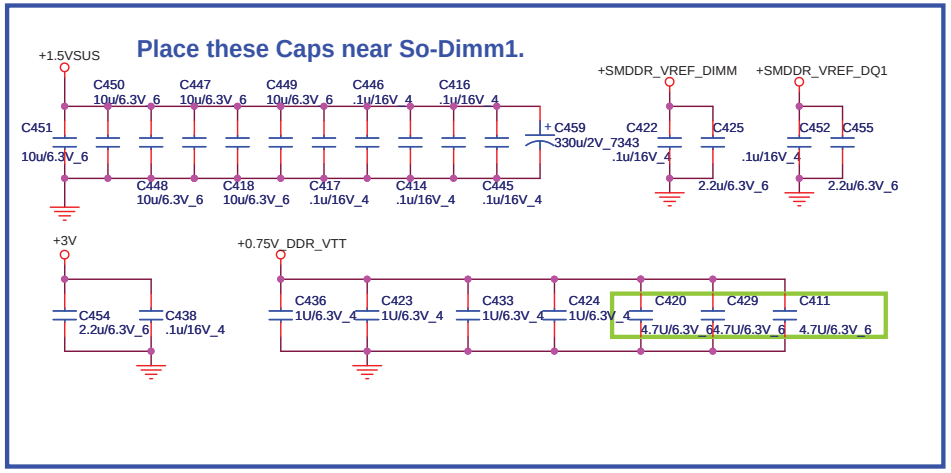

Quanta Computer Inc.

PROJECT : ZRD

Size	Document Number	Rev
	DDRIII SO-DIMM-1	1C

Date: Wednesday, July 21, 2010 Sheet 15 of 46

GPU_1(VGA)

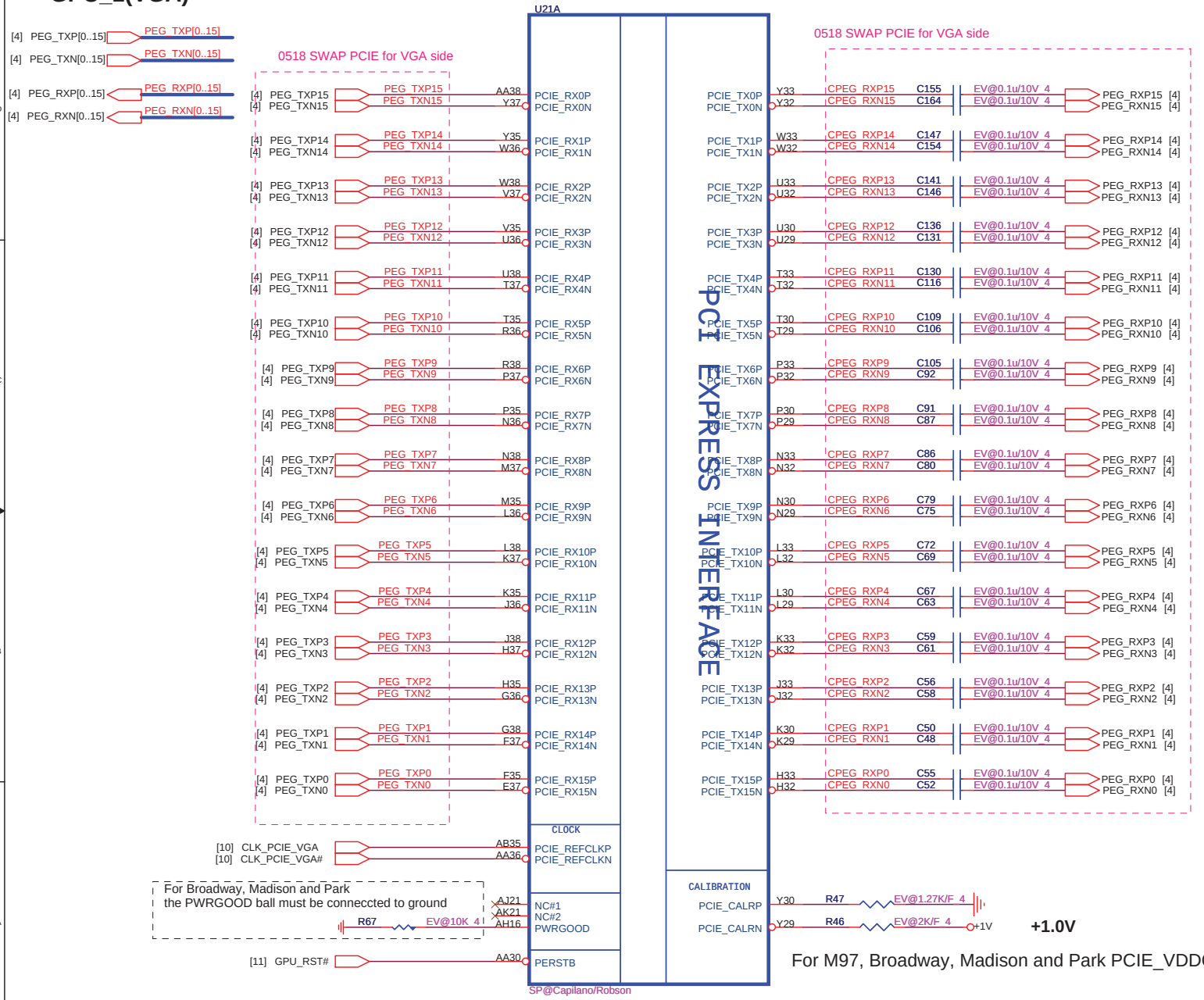

For M97, Broadway, Madison and Park PCIE_VDDC is 1.0V

Madison	AJ007720T02
Park	AJ077400T08

Quanta Computer Inc.

PROJECT : ZRD

Size	Document Number	Rev
	Capilano/Robson -PCIE I/F	1C

Date: Wednesday, July 21, 2010 Sheet 16 of 46

GPU_2(VGA)

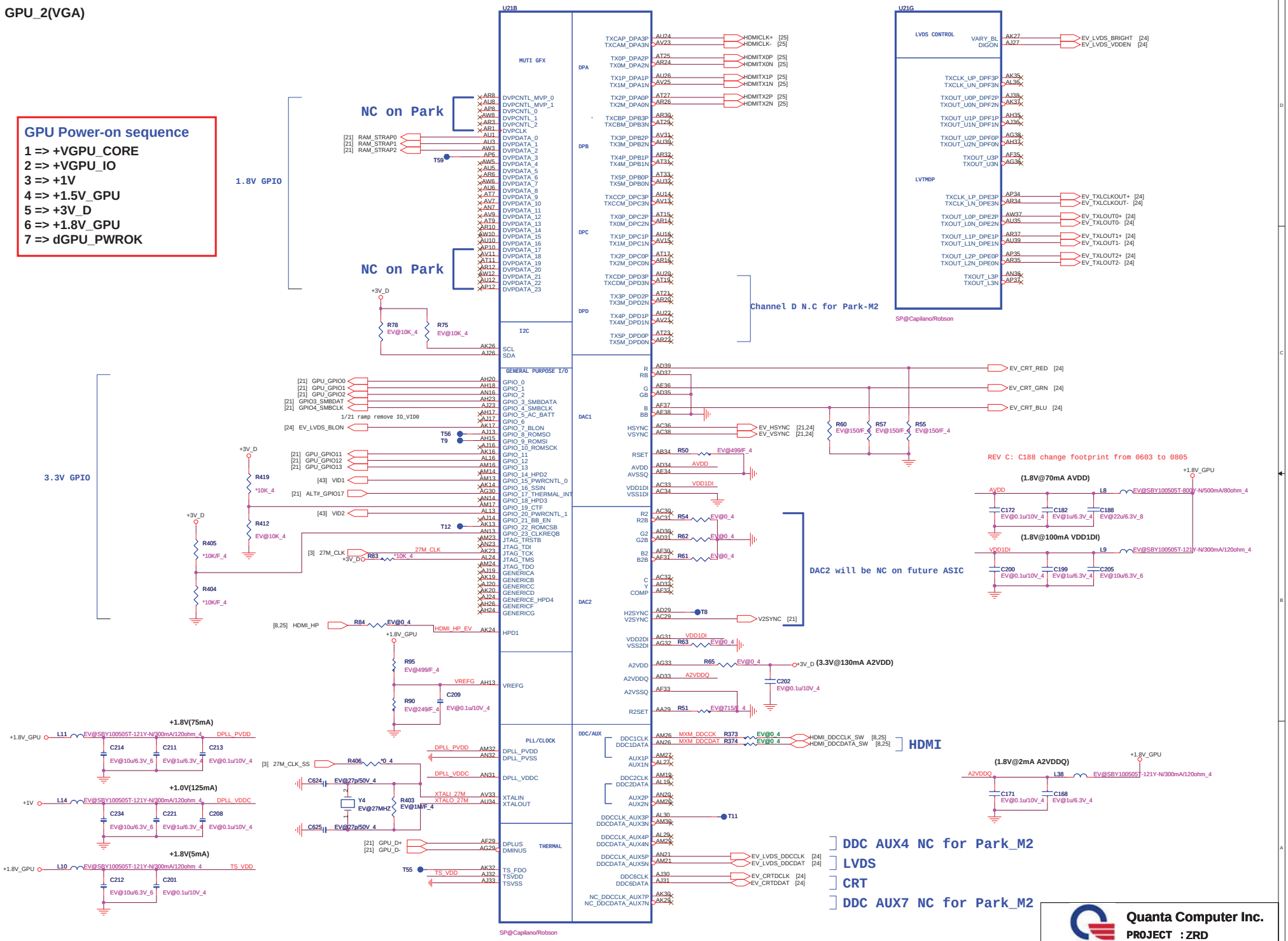

Quanta Computer Inc.

PROJECT : ZRD

Size	Document Number	Rev
	Capilano/Robson -PCIE I/F	1C

Date: Wednesday, July 21, 2010 Sheet 17 of 46

GPU_3(VGA)

Park M2-channel B used(S3 package use Channel A)

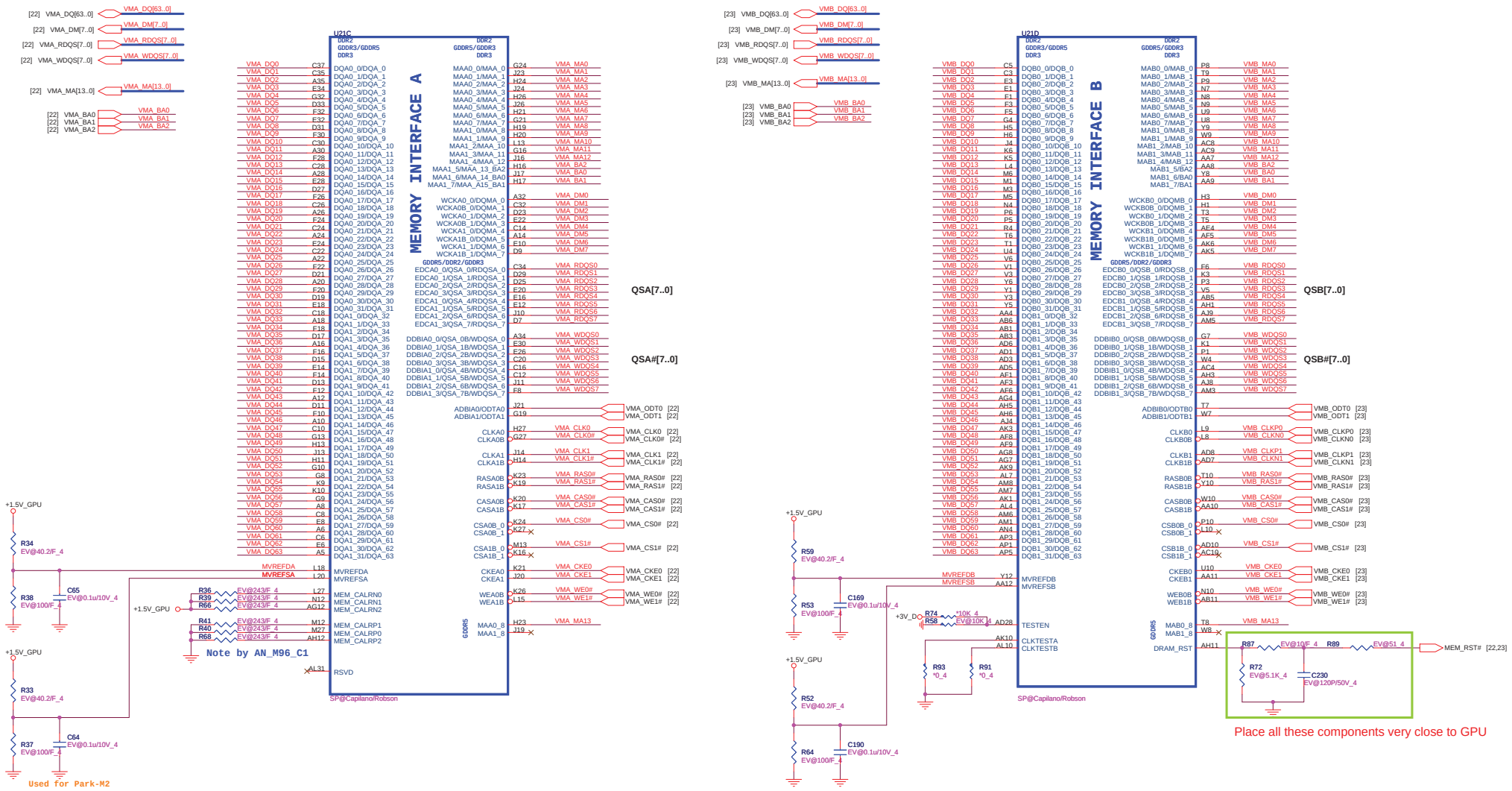

Quanta Computer Inc.		
PROJECT : ZRD		
Size	Document Number: Capilano/Robson -PCIE I/F	Rev 1C
Date: Wednesday, July 21, 2010	Sheet 18 of 46	

GPU_4(VGA)

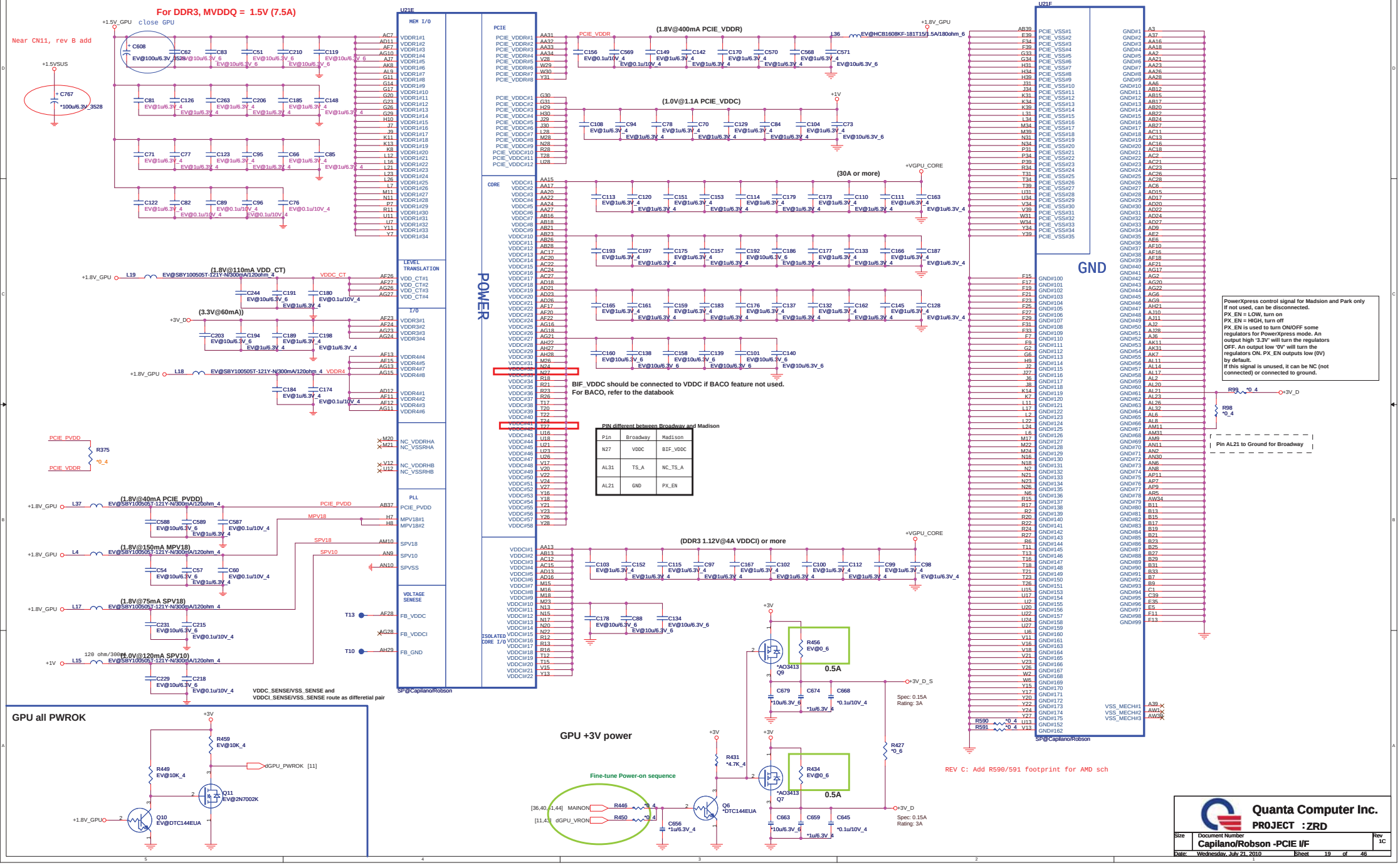

Quanta Computer Inc.
PROJECT : ZRD

Size	Document Number	Rev
	Capilano/Robson -PCIE I/F	1C

Date: Wednesday, July 21, 2010 Sheet 19 of 46

GPU_5(VGA)

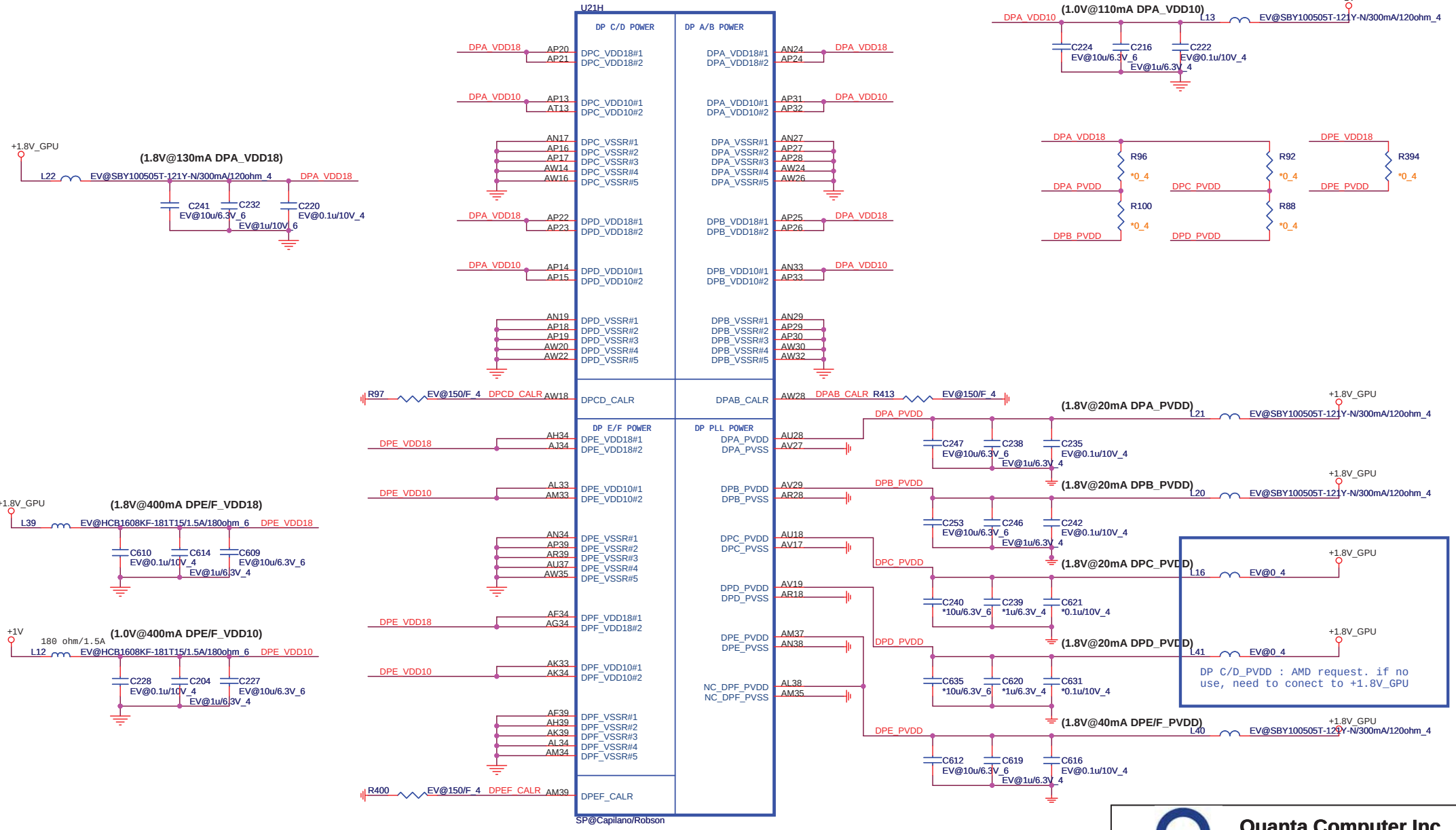

Quanta Computer Inc.

PROJECT : ZRD

Size	Document Number	Rev
	Capilano/Robson -PCIE I/F	1C

Date: Wednesday, July 21, 2010 Sheet 20 of 46

PIN STRAPS(VGA)

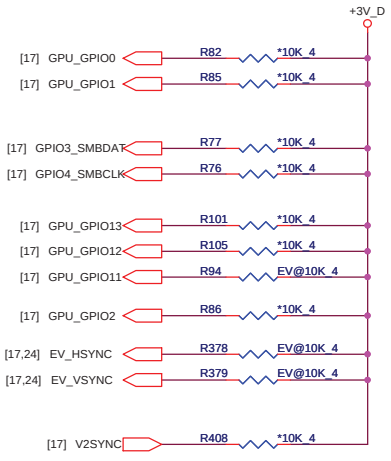

Size of the primary memory apertures	GPIO[13:11]
128 MB	000
256MB	001
64 MB	010
32 MB	011
More than 512 MB	Not Supported

CONFIGURATION STRAPS

ALLOW FOR PULLUP PADS FOR THESE STRAPS AND IF THESE GPIOS ARE USED, THEY MUST NOT CONFLICT DURING RESET

STRAPS	PIN	DESCRIPTION OF DEFAULT SETTINGS	DEFAULT	REMARK
TX_PWRS_ENB	GPIO0	0 = 50% TX OUTPUT SWING 1 = FULL TX OUTPUT SWING	0	
TX_DEEMPH_EN	GPIO1	PCIE TRANSMITTER DE-EMPHASIS ENABLED 0 = TX DE-EMPHASIS DISABLED 1 = TX DE-EMPHASIS ENABLED	0	
BIOS_ROM_EN	GPIO_22_ROMCSB	Enable external BIOS ROM device 0 - Disable external BIOS ROM device 1 - Enable external BIOS ROM device	0	
ROMIDCFG[2:0]	GPIO[13:11]	SERIAL ROM TYPE OR MEMORY APERTURE SIZE SELECT	001	See ROM table
BIF_GEN2_EN_A	GPIO2	0 = PCIE DEVICE AS 2.5GT/S CAPABLE 1 = PCIE DEVICE AS 5GT/S CAPABLE	0	
GPIO_8_ROMSO H2SYNC GPIO_21_BB_EN	GPIO8 H2SYNC GPIO21	Reserved Only	0	
AUD[1] AUD[0]	HSYNC VSYNC	AUD[1:0] 00: NO AUDIO FUNCTION. 01: AUDIO FOR DISPLAYPORT AND HDMI IF ADAPTER IS DETECTED. 10: AUDIO FOR DISPLAYPORT ONLY. 11: AUDIO FOR BOTH DISPLAYPORT AND HDMI.	11	See Audio table
GPIO_9_ROMSI	GPIO9	0 = VGA controller capacity enable	0	
VIP_DEVICE_STRAP_ENA	V2SYNC	0 = DRIVER would ignore the value sample on VHAD_0 during RESET.	0	

Thermal Sensor(VGA)

Vendor	P/N
WINDBOND	AL83L771K01
GMT	AL000780000

USD0.16

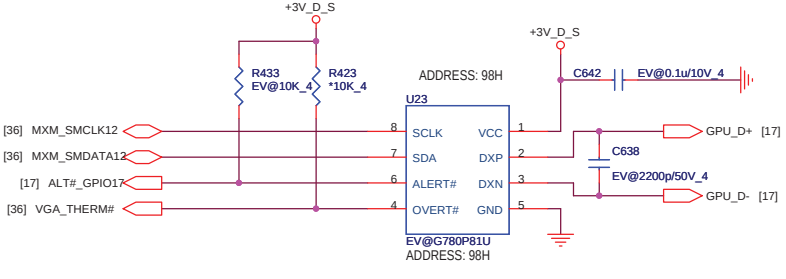

DDR3 Memory Aperture size(GPU)

DDR3 Memory size

Vendor	Vendor P/N	STN B/S P/N	RAM_STRAP2 DVPDATA_2	RAM_STRAP1 DVPDATA_1	RAM_STRAP0 DVPDATA_0
Hynix			1	1	0
	H5TQ1G63BFR-12C	AKD5LZGTW04 (64M*16)	1	0	0
	H5TQ2G63BFR-12C	AKD5MGGTW03 (128M*16)	1	0	1
Samsung					
	K4W1G1646E-HC12	AKD5LGGT506 (64M*16)	0	0	0
	K4W2G1646B-HC12	AKD5MGGT500 (128m*16)	0	0	1
AMD	23EY2387MA12-SZ	AKD5LGGT700	0	1	0

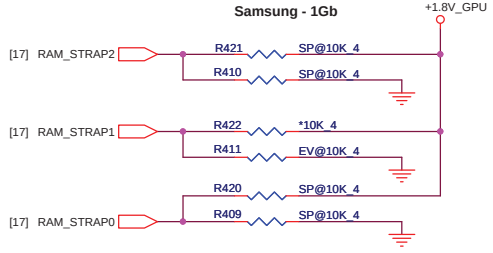

RAM_STRAP2 SET DDR3 Vendor
RAM_STRAP[1:0] SET SIZE.

Quanta Computer Inc.

PROJECT : ZRD

Size	Document Number	Rev
	Strip/Thermal	1C

Date: Wednesday, July 21, 2010 Sheet 21 of 46

CHANNEL A: 512MB DDR3 (64M*16*4pcs)

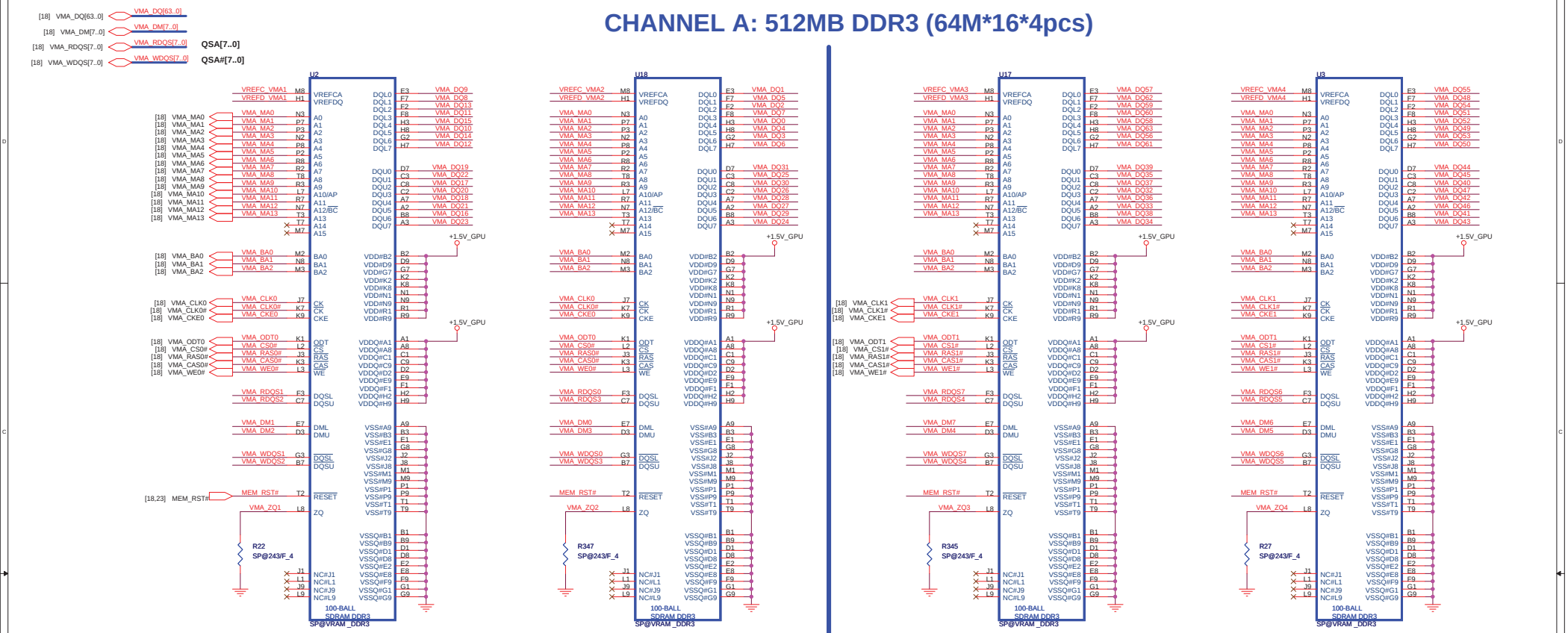

Group-A0 VREF

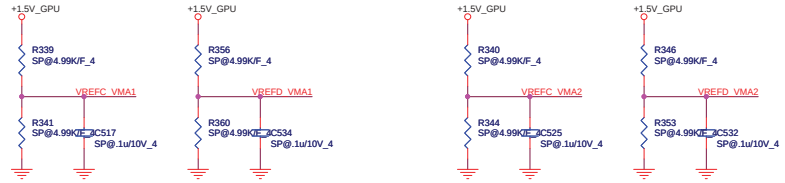

Group-A1 VREF

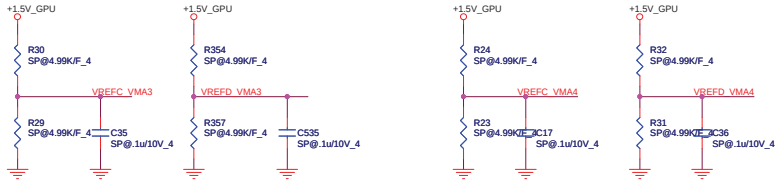

MEM_A0 CLK

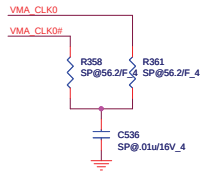

Group-A0 decoupling CAP

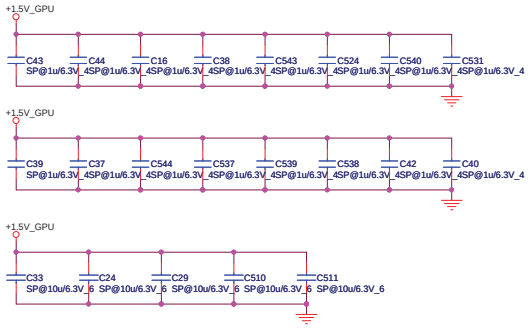

Group-A1 decoupling CAP

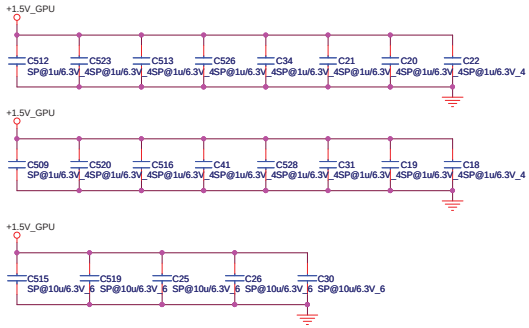

MEM_A1 CLK

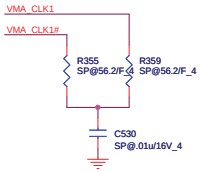

Quanta Computer Inc.

PROJECT : ZRD

Size	Document Number	Rev
	MEMORY 1 channel A	1C

Date: Wednesday, July 21, 2010 Sheet 22 of 46

CHANNEL B: 512MB DDR3 (16*64M*4pcs)

Park, M92M Use Channel B Memory Interface Only

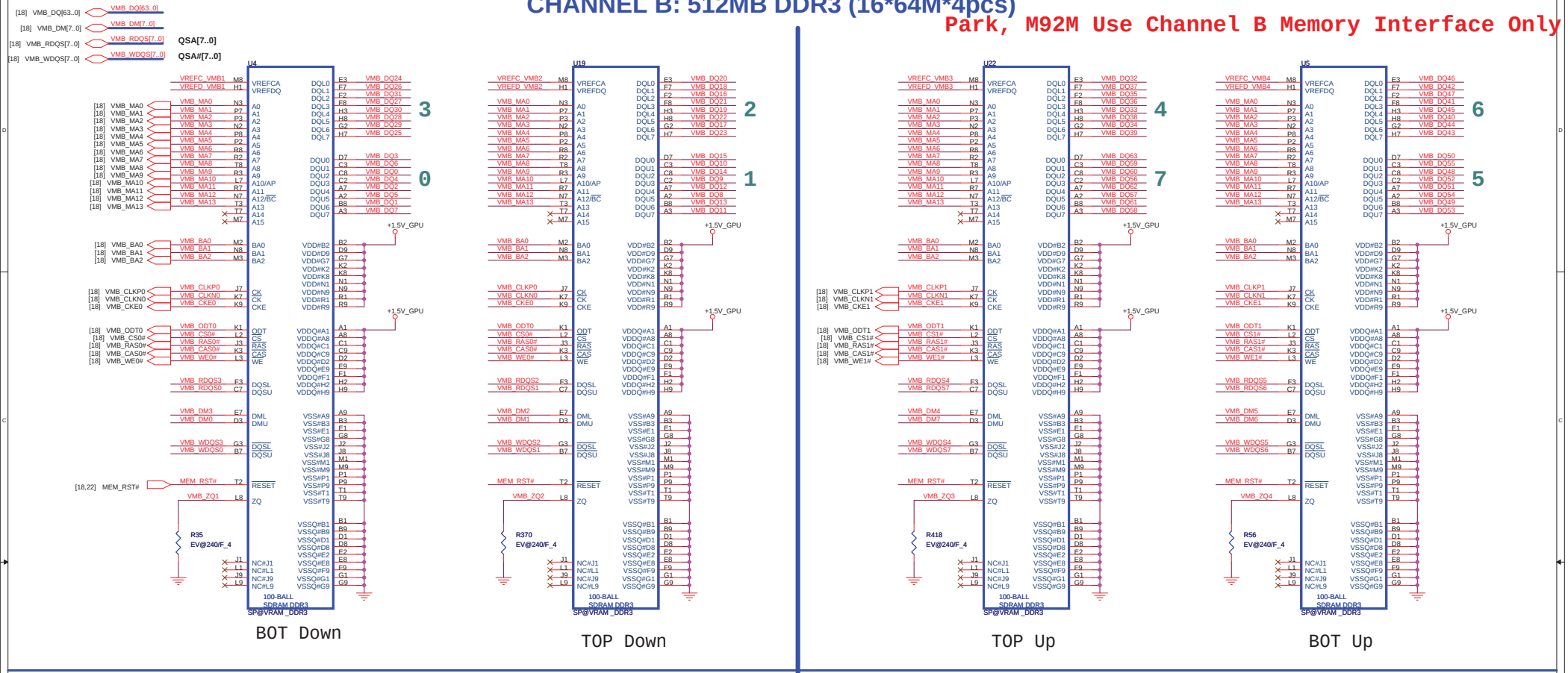

Group-B0 VREF

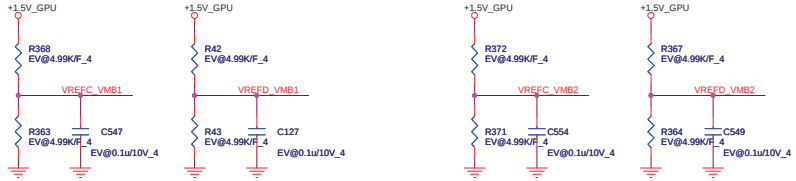

Group-B1 VREF

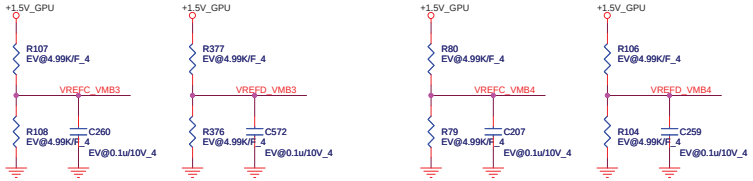

MEM_B0 CLK

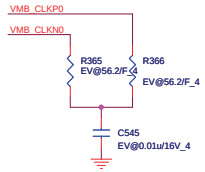

Group-B0 decoupling CAP

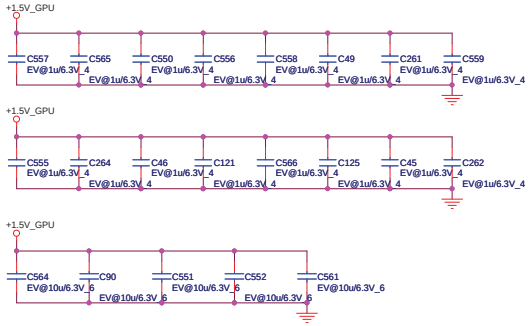

Group-B1 decoupling CAP

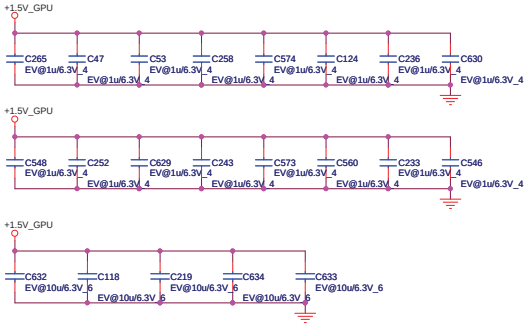

MEM_B1 CLK

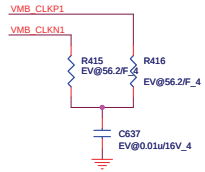

Quanta Computer Inc.

PROJECT : ZRD

Size	Document Number	Rev
	MEMORY 2 channel B	1C

Date: Wednesday, July 21, 2010 Sheet 23 of 46

CRT Switch

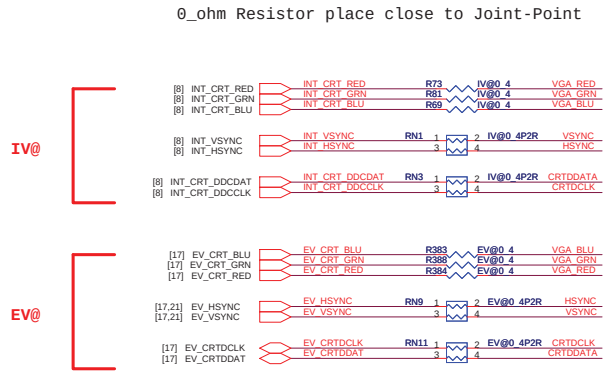

CRT

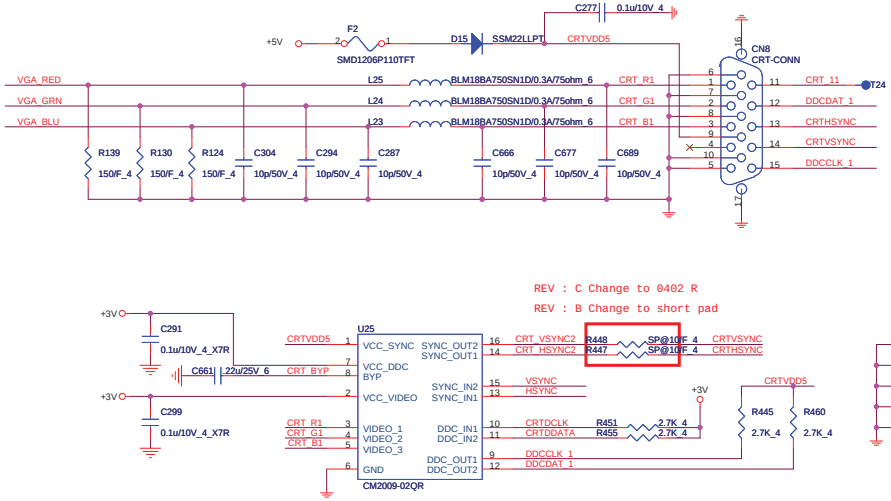

LVDS

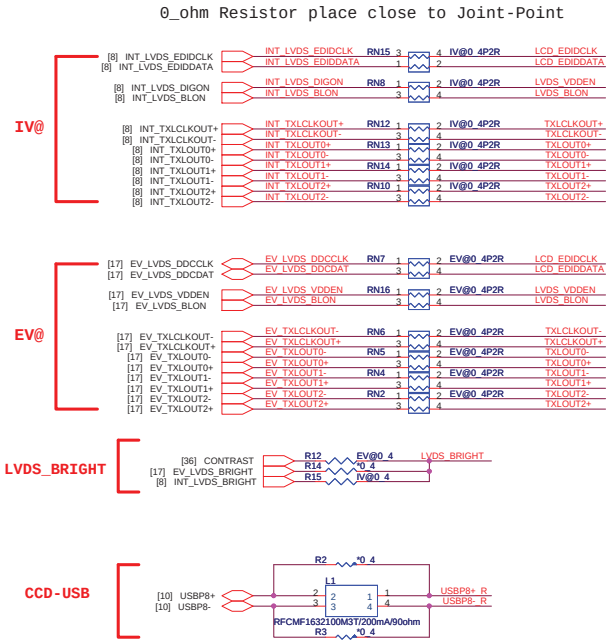

LVDS

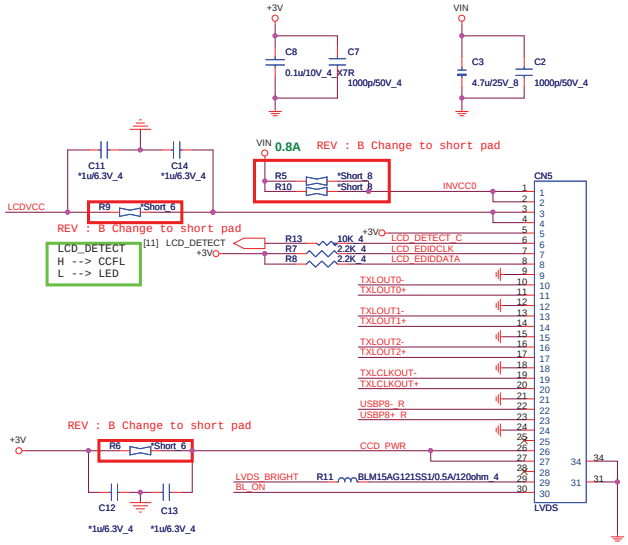

Lid Switch (Hall sensor)

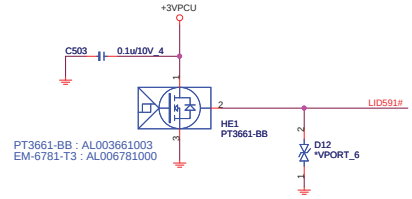

LCD Power

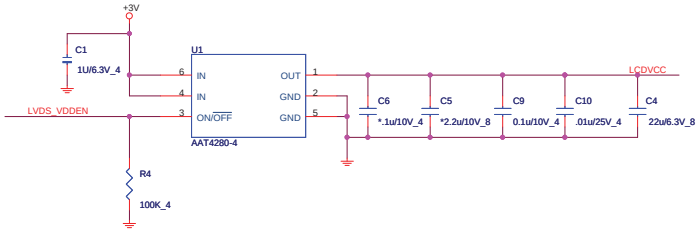

Backlight Control

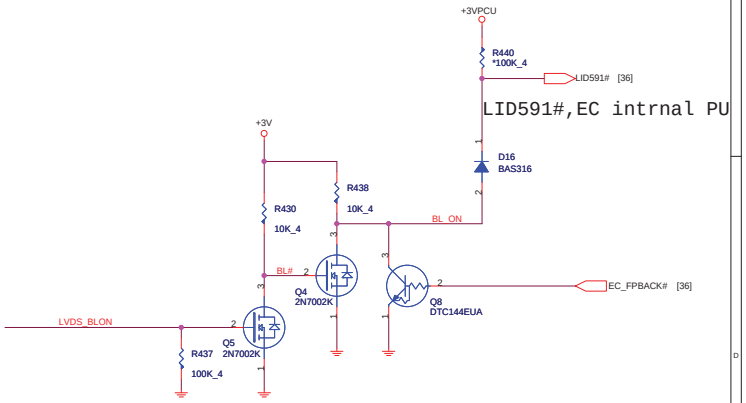

Quanta Computer Inc.

PROJECT : ZRD

Size	Document Number	Rev
	CRT/LVDS/CAMERA/LID	1C

Date: Wednesday, July 21, 2010 Sheet 24 of 46

HDMI LEVEL SHIFTER

IV@

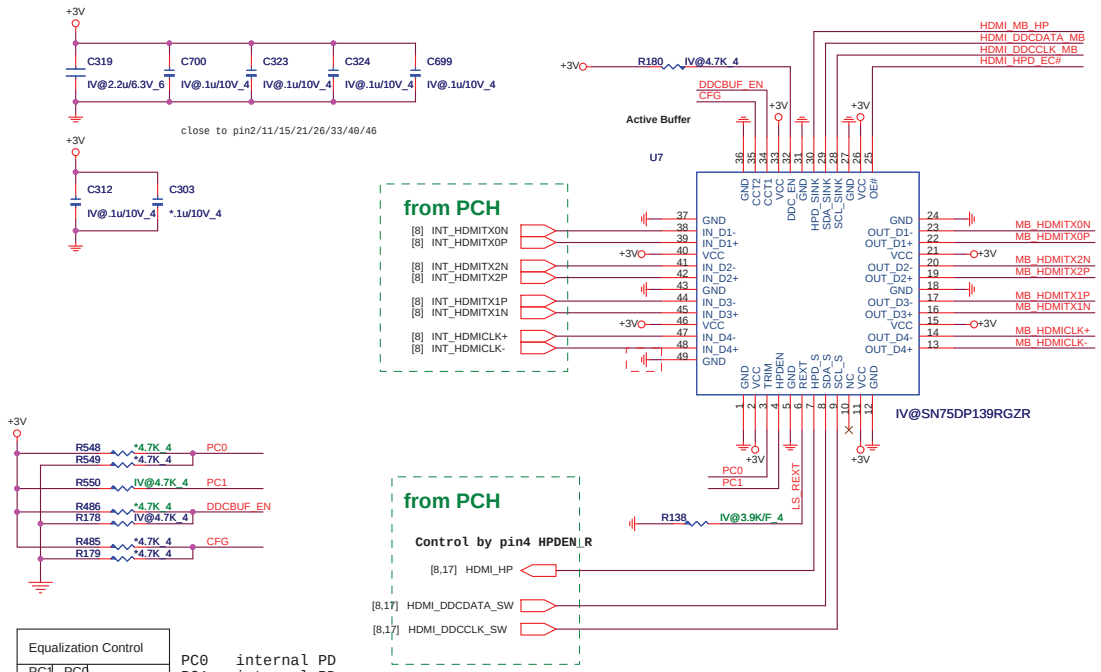

Equalization Control		
PC1 PIN4	PC0 PIN3	EQ Control
L	L	8dB
L	H	4dB
H	L	12dB
H	H	0dB

PC0 internal PD
PC1 internal PD
DDCBUF_EN internal PD
CFG internal PD
DDC_EN internal PU

HDMI-detect

EV@

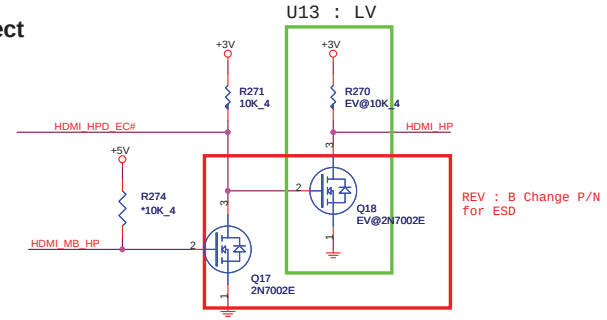

I2C

EV@

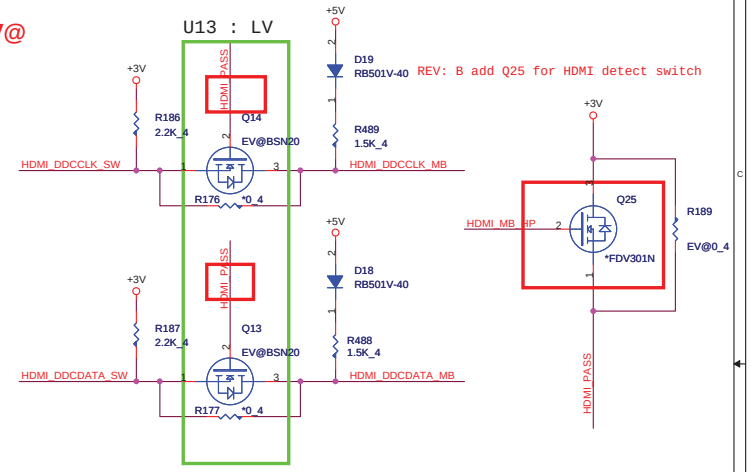

Switchable Graphic HDMI source

EV@

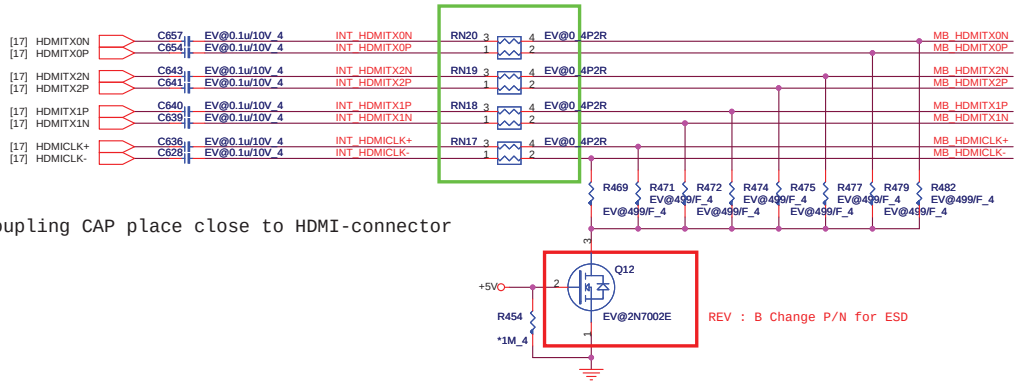

AC-coupling CAP place close to HDMI-connector

EMI

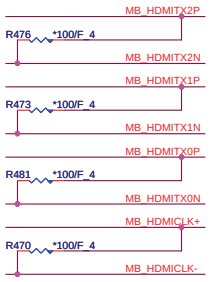

REV : C Location :D20 Change Footprint & P/N

REV C: Change D20 footprint for HDMI

SUY	DFHD19MR053
LTS	DFHD19MR085

HDMI connector

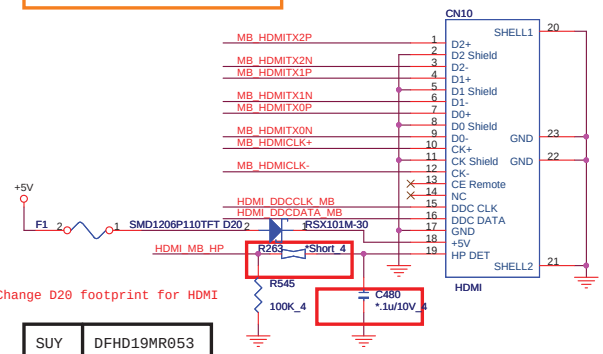

REV : B Change to short pad and add C480

Quanta Computer Inc.

PROJECT : ZRD

Size	Document Number	Rev
	HDMI (PS8101)	1C

Date: Wednesday, July 21, 2010 Sheet 25 of 46

Giga-LAN BCM57780

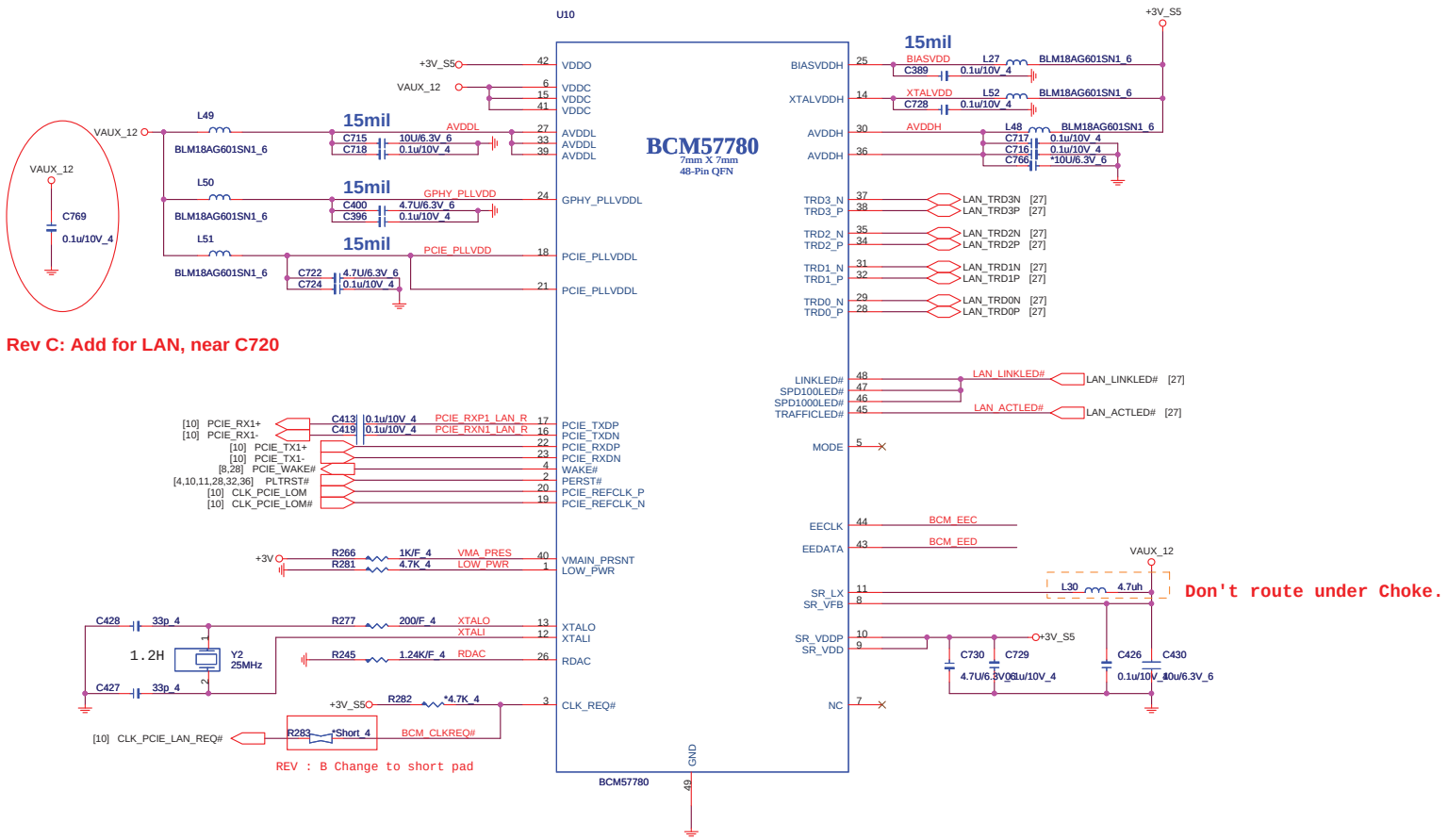

Rev C: Add for LAN, near C720

LAN POWER

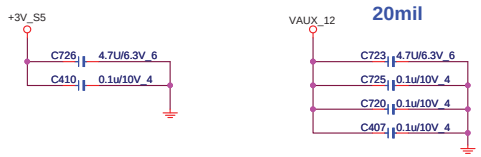

EEPROM

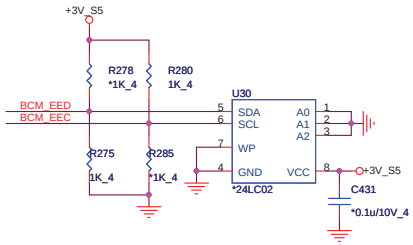

EEPROM Strapping

EEPROM Type	EECLK	EEDATA
24LC02	1	1
Internal	1	0

Quanta Computer Inc.

PROJECT : ZRD

Size	Document Number	Rev
	GLAN BCM57780	1C

Date: Wednesday, July 21, 2010 Sheet 26 of 46

TRANSFORMER

SUY	DFTJ12FR109
AEC	DFTJ12FR135

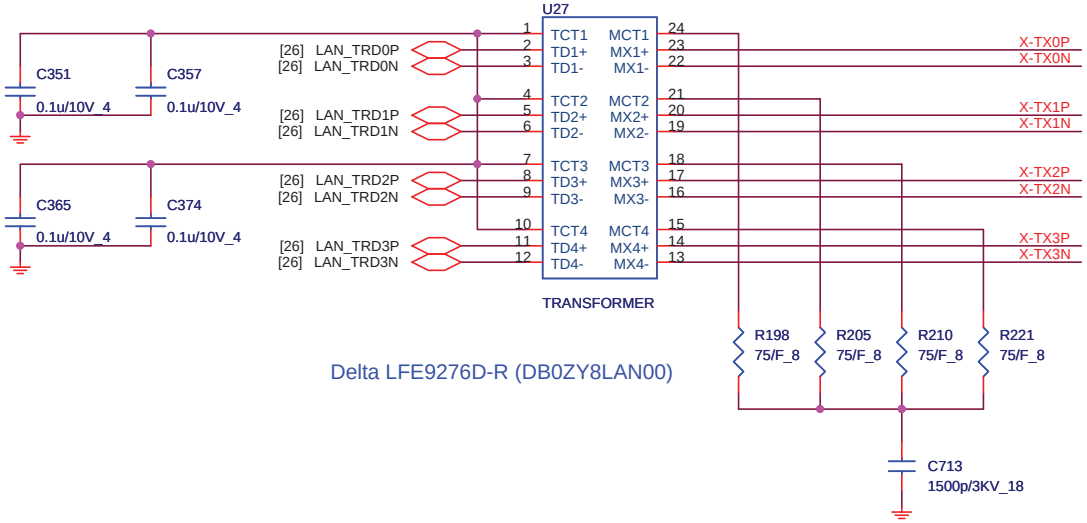

Delta LFE9276D-R (DB0ZY8LAN00)

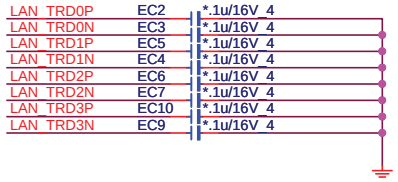

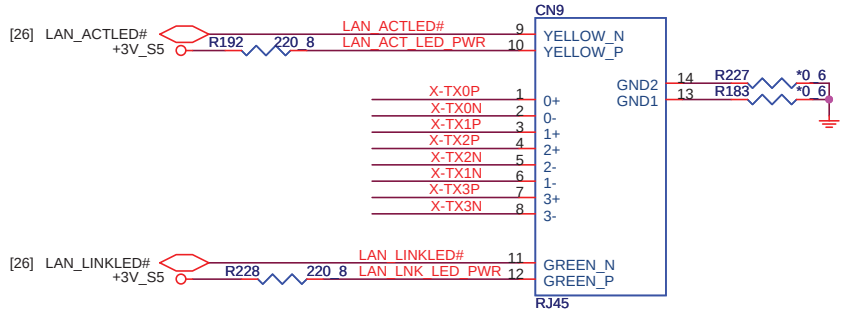

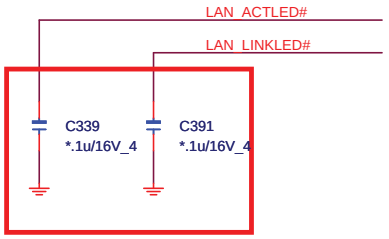

REV : B Change to 0402 for ESD

Quanta Computer Inc.

PROJECT : ZRD

Size	Document Number	Rev
	LAN Transformer and RJ45	1C

Date: Wednesday, July 21, 2010 Sheet 27 of 46

MINI-CARD WLAN(MPC)

+3.3V: 1000mA
+3.3Vaux:330mA
+1.5V:500mA

PTI	DFHS52FR028
LTS	DFHS52FR038

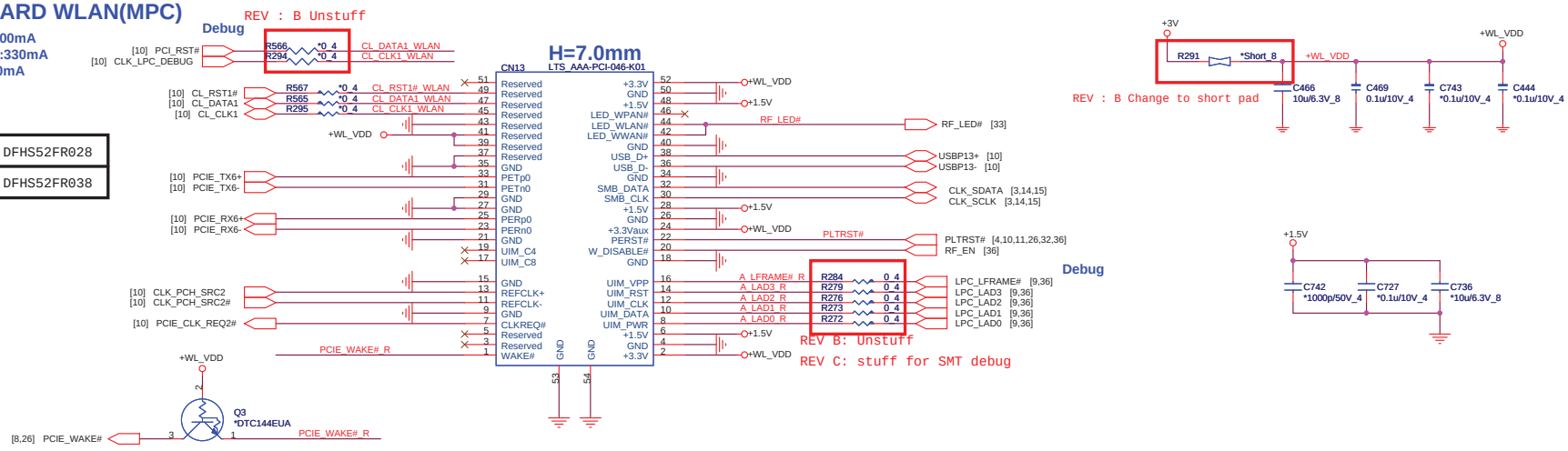

Quanta Computer Inc.

PROJECT : ZRD

Size	Document Number	Rev
	MINI PCI-E card/TV	1C

Date: Wednesday, July 21, 2010 Sheet 28 of 46

MAIN SATA HDD

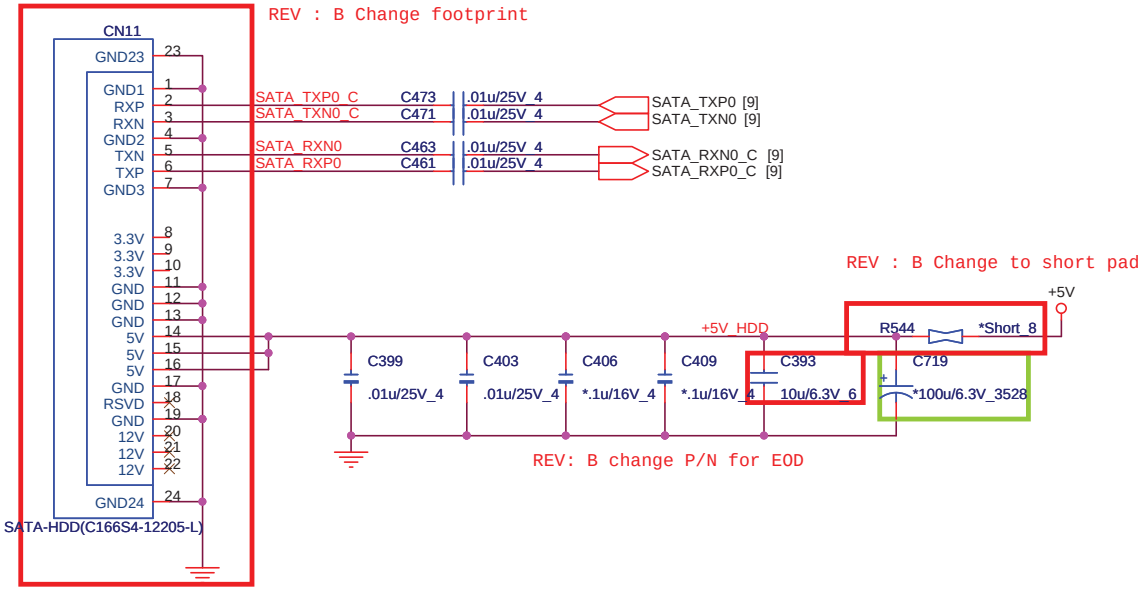

EE RETURN-PATH CAPACITORS

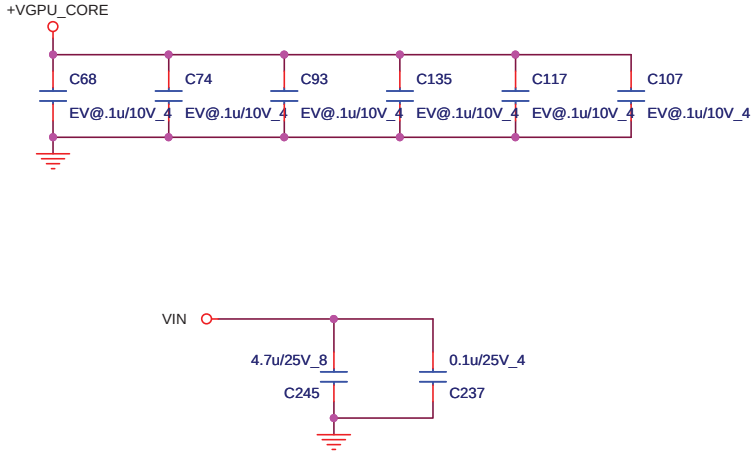

ODD (SATA)

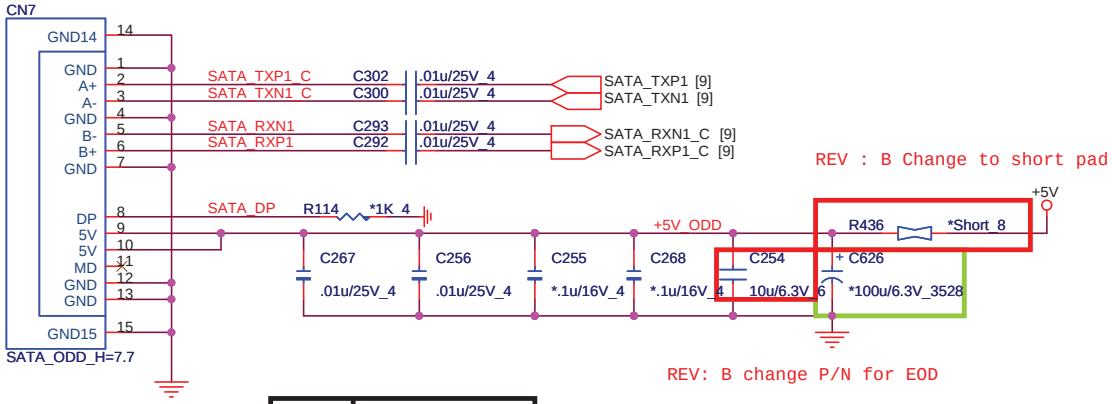

SUY	DFHS22FR214
AOP	DFHS22FR232
AEC	DFHS22FR216

AOP	DFHS13FR011
OTK	DFHS13FR010

Quanta Computer Inc.

PROJECT : ZRD

Size	Document Number	Rev
	SATA-HDD/ODD/RETURN-PATH	1C

Date: Wednesday, July 21, 2010 Sheet 29 of 46

Codec(ADO)

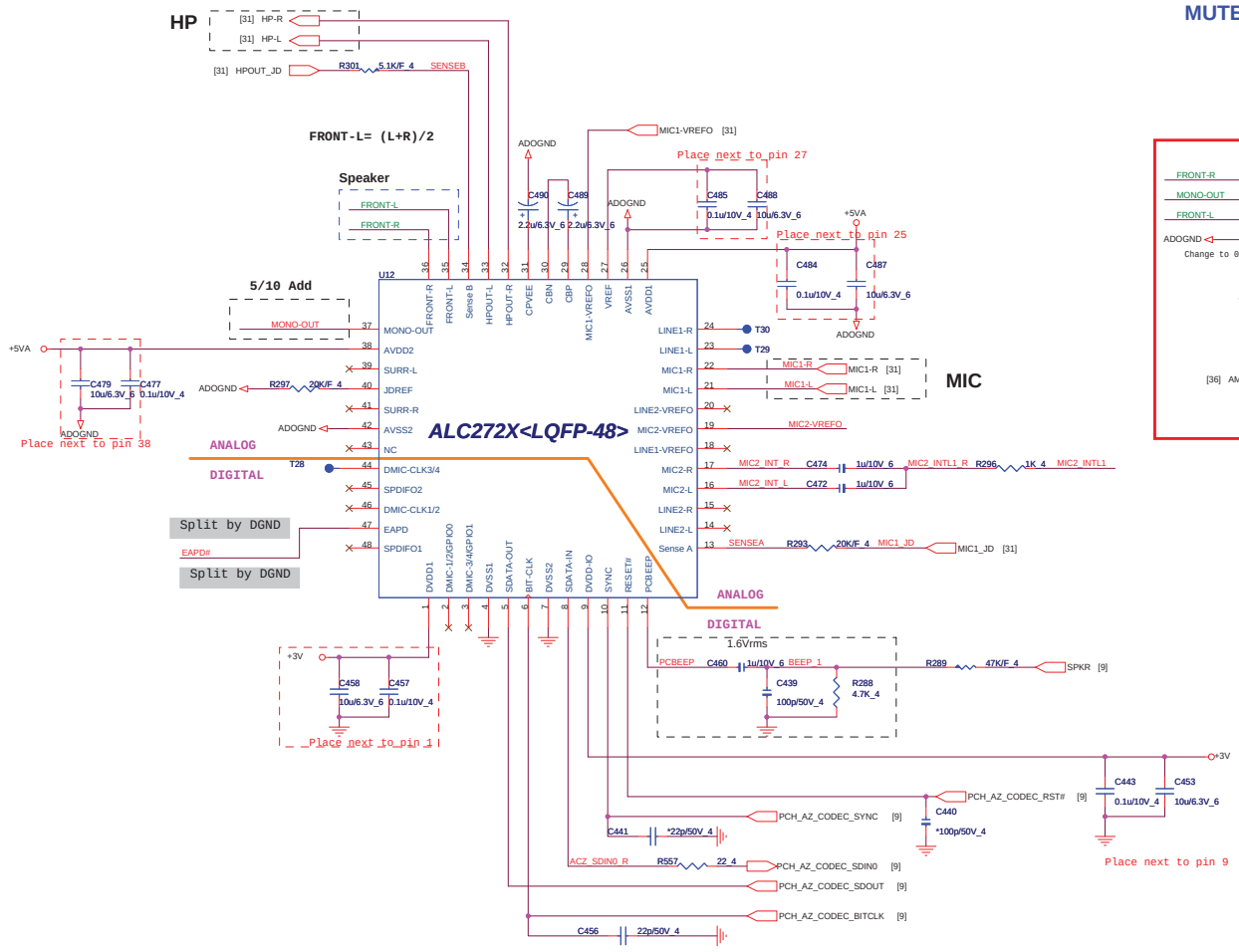

MUTE(AMP)

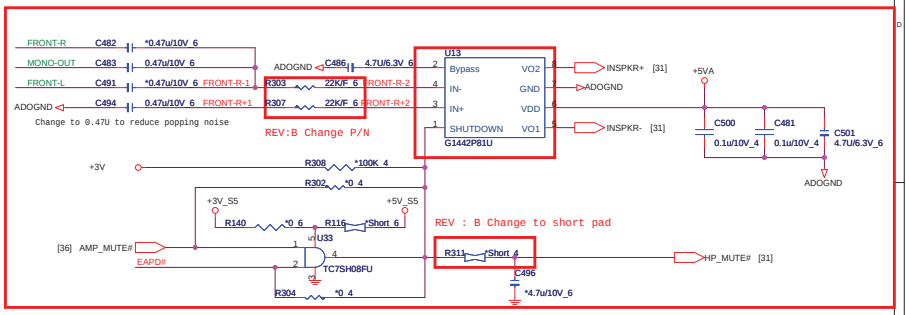

Power (ADO)

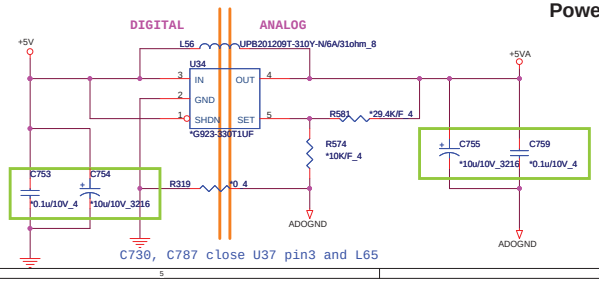

REV : B C478 Change to short pad and Stuff R563 ,R570 ,R569 ,R584 ,R299 ,C738

Place in Bottom of codec

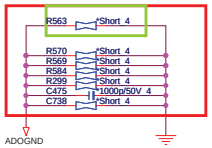

Tied at one point only under the codec or near the codec

INT MIC array

cap place close to MIC-connector

Quanta Computer Inc.

PROJECT : ZRD

Size	Document Number	Rev
	REALTEK ALC663&888/MDC	1C

Date: Wednesday, July 21, 2010 Sheet 30 of 46

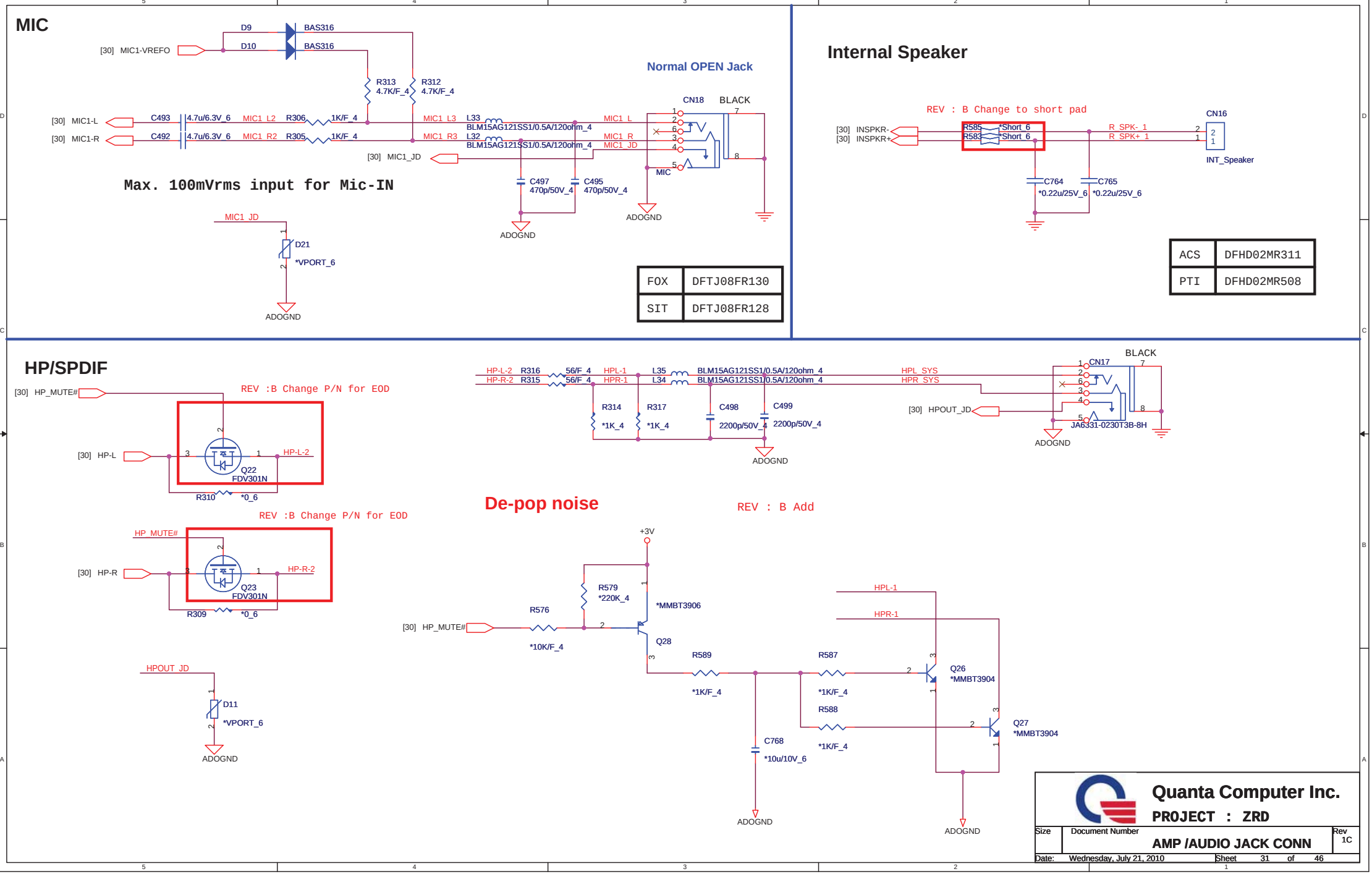
MIC
D9
BAS316
D10
BAS316
[30] MIC1-VREFO
R313
4.7K/F_4
R312
4.7K/F_4
Normal OPEN Jack
CN18
BLACK
[30] MIC1-L
C493
4.7u/6.3V_6
MIC1_L2
R306
1K/F_4
MIC1_L3
L33
BLM15AG121SS1/0.5A/120ohm_4
MIC1_L
[30] MIC1-R
C492
4.7u/6.3V_6
MIC1_R2
R305
1K/F_4
MIC1_R3
L32
BLM15AG121SS1/0.5A/120ohm_4
MIC1_R
MIC1_JD
[30] MIC1_JD
MIC
Max. 100mVrms input for Mic-IN
C497
470p/50V_4
C495
470p/50V_4
ADOGND
ADOGND
MIC1_JD
D21
*VPORT_6
ADOGND
FOX DFTJ08FR130
SIT DFTJ08FR128
Internal Speaker
REV : B Change to short pad
CN16
[30] INSPKR-
[30] INSPKR+
R585
*Short_6
R583
*Short_6
R_SPK- 1
R_SPK+ 1
INT_Speaker
C764
*0.22u/25V_6
C765
*0.22u/25V_6
ACS DFHD02MR311
PTI DFHD02MR508
HP/SPDIF
[30] HP_MUTE#
REV :B Change P/N for EOD
[30] HP-L
HP-L-2
Q22
FDV301N
R310
*0_6
REV :B Change P/N for EOD
HP_MUTE#
[30] HP-R
HP-R-2
Q23
FDV301N
R309
*0_6
HPOUT_JD
D11
*VPORT_6
ADOGND
HP-L-2
R316
56/F_4
HP-R-2
R315
56/F_4
HPL-1
HPR-1
L35
L34
BLM15AG121SS1/0.5A/120ohm_4
BLM15AG121SS1/0.5A/120ohm_4
HPL_SYS
HPR_SYS
R314
*1K_4
R317
*1K_4
C498
2200p/50V_4
C499
2200p/50V_4
ADOGND
CN17
BLACK
[30] HPOUT_JD
JA6331-0230T3B-8H
ADOGND
De-pop noise
REV : B Add
+3V
R579
*220K_4
*MMBT3906
R576
*10K/F_4
[30] HP_MUTE#
Q28
R589
*1K/F_4
R587
*1K/F_4
R588
*1K/F_4
Q26
*MMBT3904
Q27
*MMBT3904
HPL-1
HPR-1
C768
*10u/10V_6
ADOGND
ADOGND
Quanta Computer Inc.
PROJECT : ZRD
Size
Document Number
AMP /AUDIO JACK CONN
Rev
1C
Date: Wednesday, July 21, 2010
Sheet 31 of 46

CARD READER Controller

2 IN 1 CARD READER (SD/MMC)

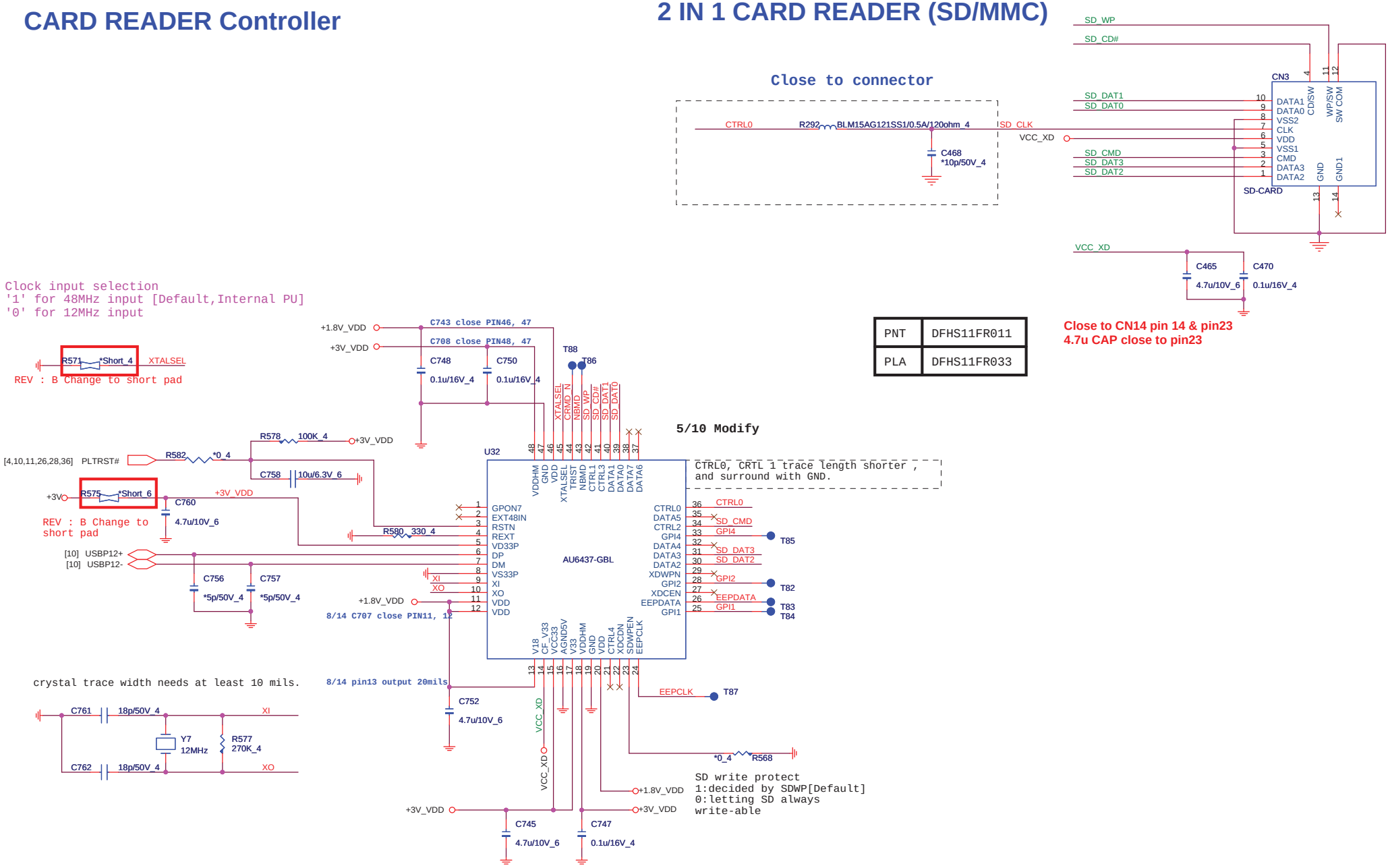

PNT	DFHS11FR011
PLA	DFHS11FR033

PROJECT : ZQ5
Quanta Computer Inc.

Size	Document Number	Rev
	AU6433 CardReader	1C
Date: Wednesday, July 21, 2010	Sheet 32 of 43	

LED

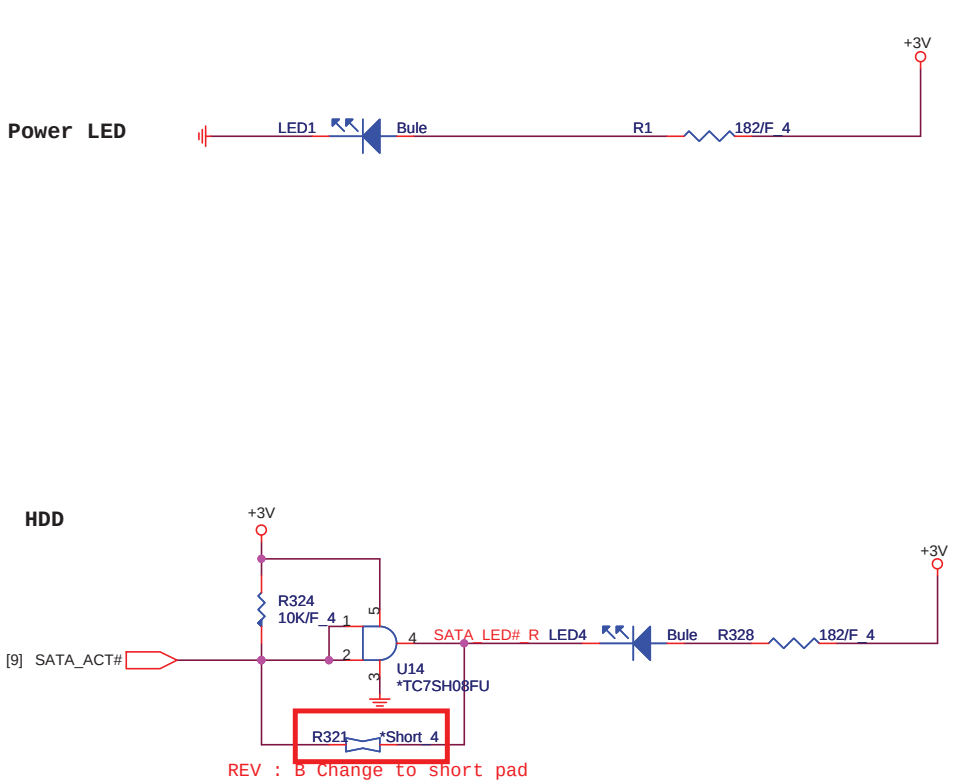

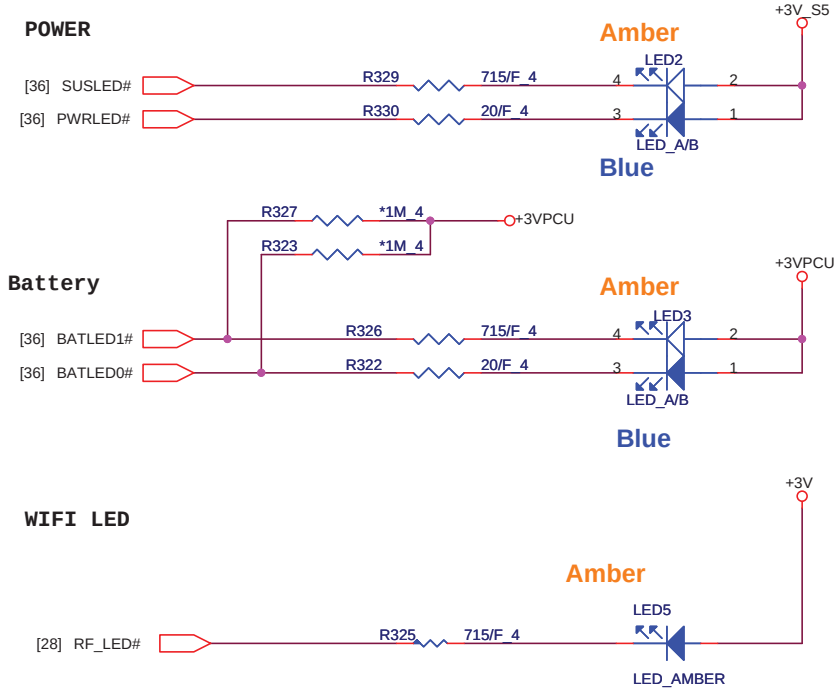

Quanta Computer Inc.		
PROJECT : ZRD		
Size	Document Number: POWER/MMB/LAUNCH/LED	Rev 1C
Date: Wednesday, July 21, 2010	Sheet 33 of 46	

USB

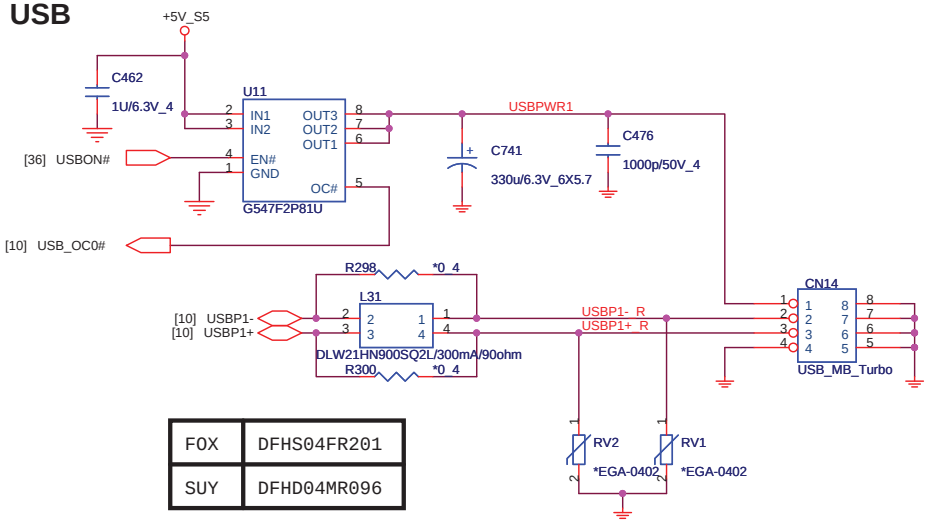

FOX	DFHS04FR201
SUY	DFHD04MR096

BLUETOOTH CONNECTOR

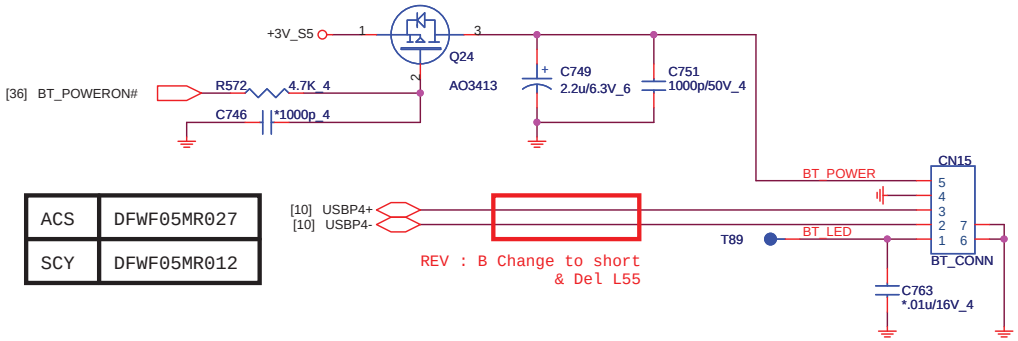

ACS	DFWF05MR027
SCY	DFWF05MR012

USB/B

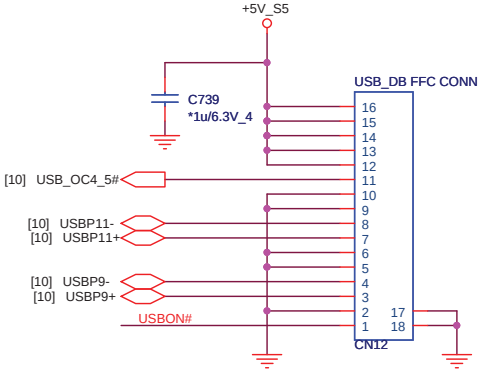

Quanta Computer Inc.

PROJECT : ZRD

Size	Document Number	Rev
	USB/ BT	1C

Date: Wednesday, July 21, 2010 Sheet 34 of 46

K/B

PTI	DFFC26FR155
ACS	DFFC26FR014

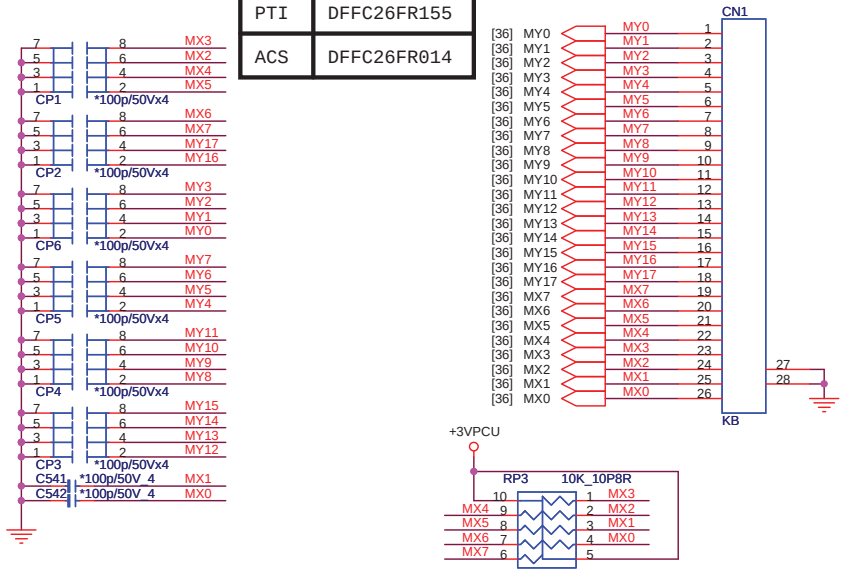

CPU FAN

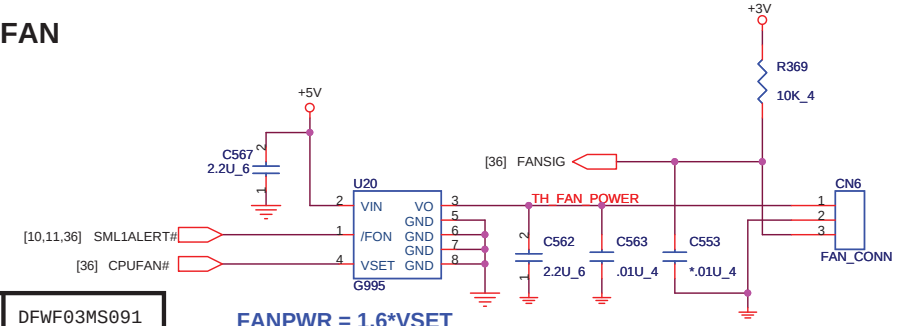

ACS	DFWF03MS091
SCY	DFWF03MS000

FANPWR = 1.6*VSET

TOUCHPAD & Switch CONN.

ACS	DFFC12FR017
SCY	DFFC12FR015
PTI	DFFC12FR234

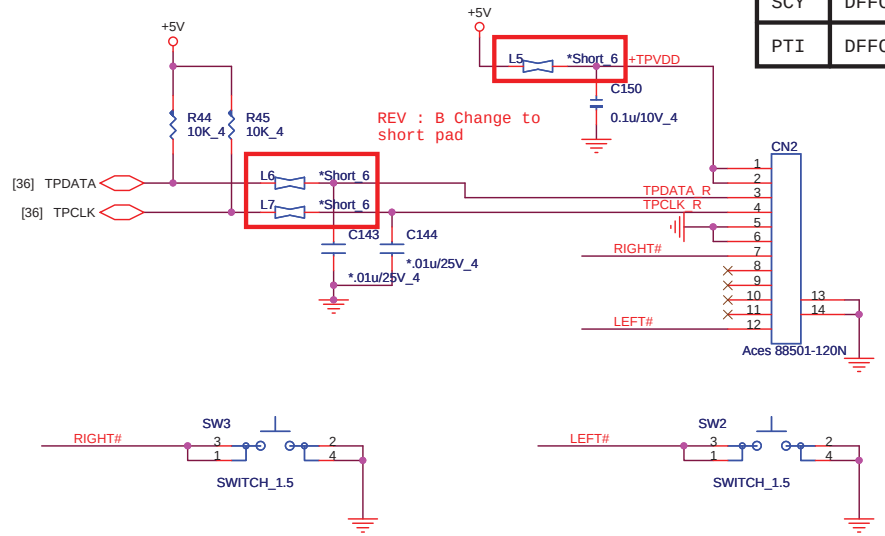

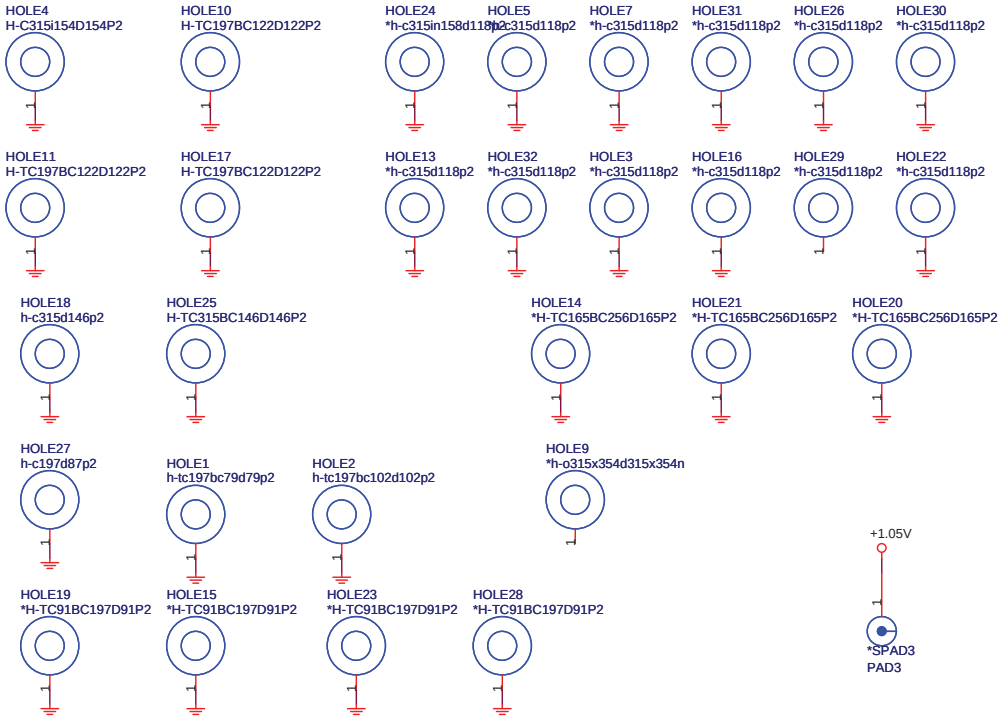

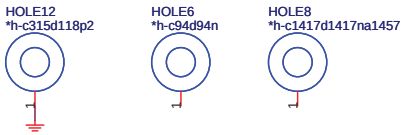

Quanta Computer Inc.

PROJECT : ZRD

Size	Document Number	Rev
	KB/FAN/TP+FP	1C

Date: Wednesday, July 21, 2010 Sheet 35 of 46

EC(KBC)

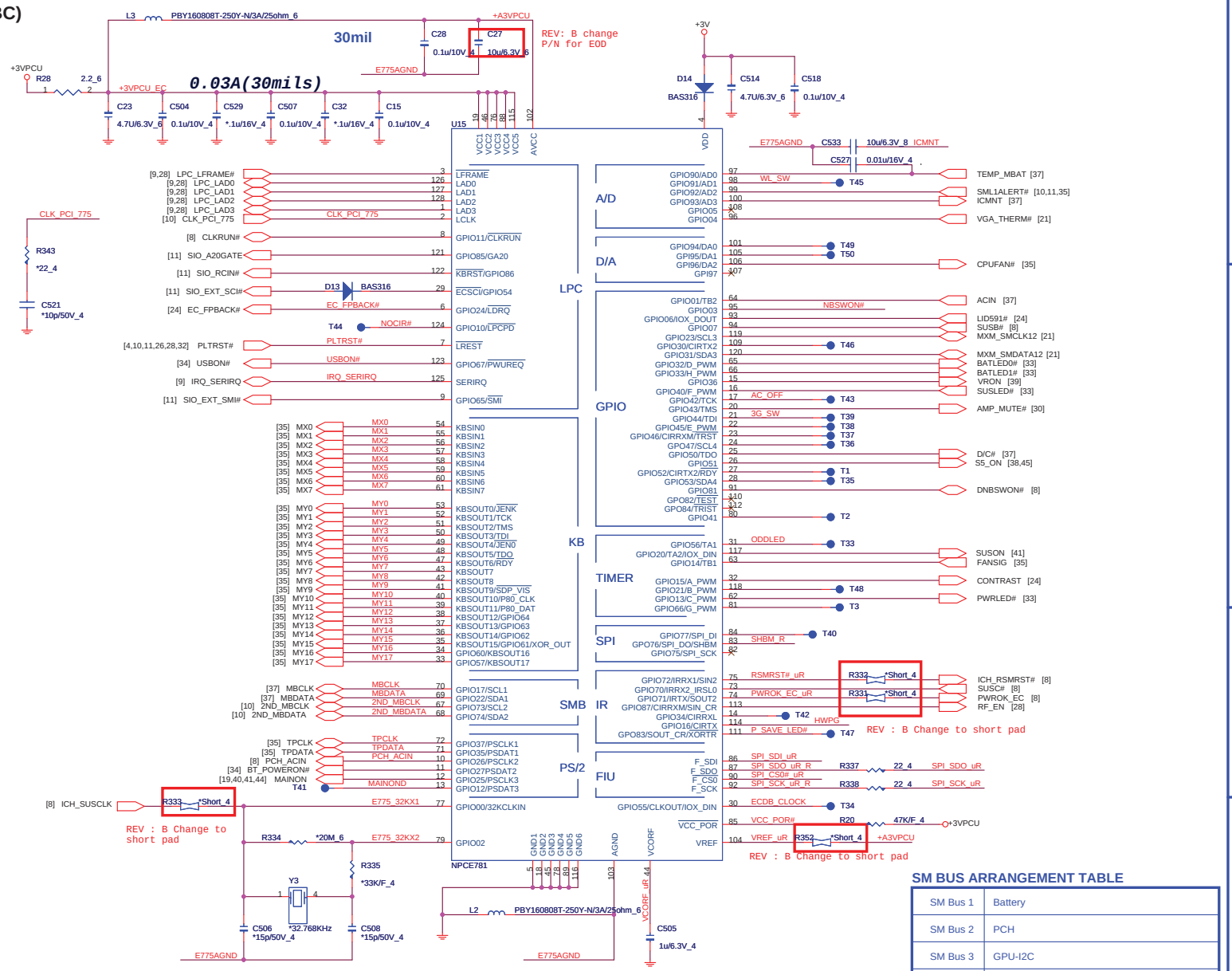

SM BUS ARRANGEMENT TABLE

SM Bus 1	Battery
SM Bus 2	PCH
SM Bus 3	GPU-I2C
SM Bus 4	N/A

I/O ADDRESS SETTING(KBC)

SHBM=0: Enable shared memory with host BIOS

SHBM — SHBM_R — R336 — *10K_4

1/13 Comfirm by vendor mail :
Disabled ('1') if using FWH device on LPC.
Enabled ('0') if using SPI flash for both system BIOS and EC firmware

SM BUS PU(KBC)

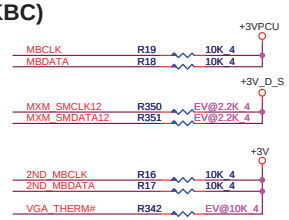

SPI FLASH(KBC)

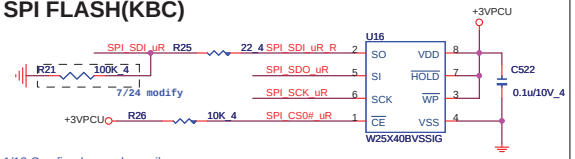

1/13 Comfirm by vendor mail :
If the Southbridge enables 'Long Wait Abort' by
default, the flash device should be 50MHz (or faster)

HWPG(KBC)

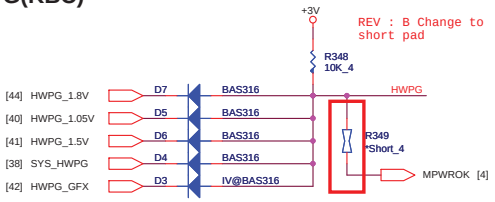

POWER-ON Switch(KBC)

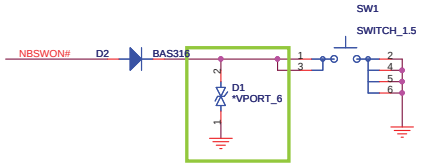

5/13 change the location

INTERNAL KEYBOARD STRIP SET(KBC)

Quanta Computer Inc.

PROJECT : ZRD

Size	Document Number	Rev
	WPCE781 & FLASH	1C

Date: Wednesday, July 21, 2010 Sheet 36 of 46

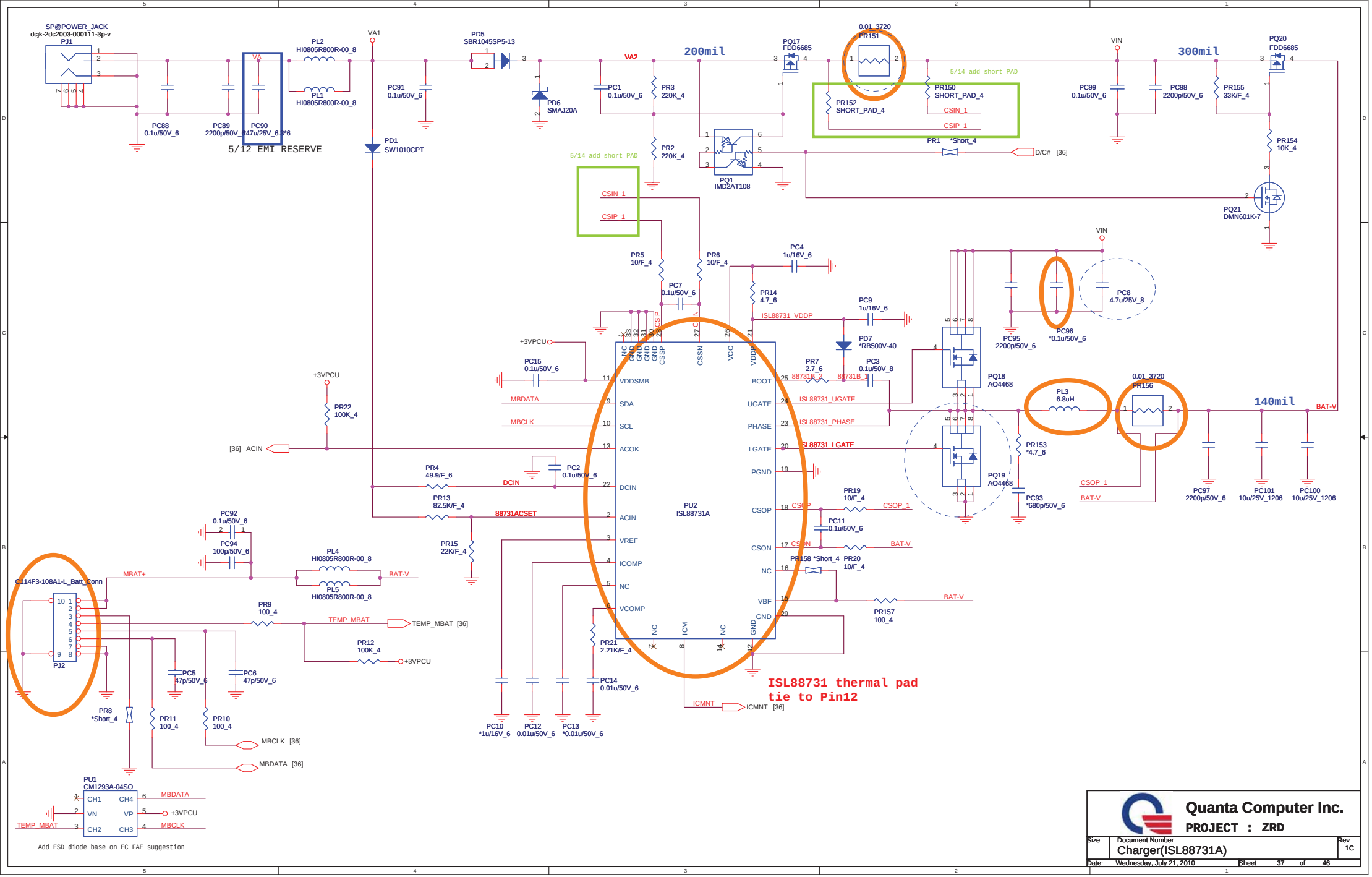
SP@POWER_JACK
dcjk-2dc2003-000111-3p-v
PJ1
PL2
HI0805R800R-00_8
PL1
HI0805R800R-00_8
VA1
PD5
SBR1045SP5-13
VA2
200mil
PQ17
FDD6685
0.01_3720
PR151
5/14 add short PAD
PR150
SHORT_PAD_4
PR152
SHORT_PAD_4
CSIN_1
CSIP_1
VIN
300mil
PQ20
FDD6685
PC88
0.1u/50V_6
PC89
2200p/50V_6
PC90
47u/25V_6.3*6
5/12 EMI RESERVE
PD1
SW1010CPT
PC91
0.1u/50V_6
PD6
SMAJ20A
PC1
0.1u/50V_6
PR3
220K_4
PR2
220K_4
PQ1
IMD2AT108
PR1
*Short_4
D/C# [36]
PC99
0.1u/50V_6
PC98
2200p/50V_6
PR155
33K/F_4
PR154
10K_4
PQ21
DMN601K-7
PR5
10/F_4
PR6
10/F_4
PC7
0.1u/50V_6
PC4
1u/16V_6
PR14
4.7_6
ISL88731_VDDP
PC9
1u/16V_6
PD7
*RB500V-40
PC3
0.1u/50V_8
PC8
4.7u/25V_8
PC95
2200p/50V_6
PC96
*0.1u/50V_6
+3VPCU
PC15
0.1u/50V_6
PR7
2.7_6
88731B_2
88731B_1
PQ18
AO4468
PL3
6.8uH
0.01_3720
PR156
140mil
BAT-V
PR22
100K_4
MBDATA
MBCLK
[36] ACIN
PR4
49.9/F_6
DCIN
PC2
0.1u/50V_6
PR13
82.5K/F_4
88731ACSET
PR15
22K/F_4
PU2
ISL88731A
VDDSMB
SDA
SCL
ACOK
DCIN
ACIN
VREF
ICOMP
NC
VCOMP
BOOT
UGATE
PHASE
LGATE
PGND
CSOP
CSON
NC
VBF
GND
ISL88731_UGATE
ISL88731_PHASE
ISL88731_LGATE
PR153
*4.7_6
PQ19
AO4468
PC93
*680p/50V_6
CSOP_1
BAT-V
PC97
2200p/50V_6
PC101
10u/25V_1206
PC100
10u/25V_1206
PR19
10/F_4
PC11
0.1u/50V_6
PR158 *Short_4
PR20
10/F_4
PR157
100_4
PC92
0.1u/50V_6
PC94
100p/50V_6
PL4
HI0805R800R-00_8
PL5
HI0805R800R-00_8
MBAT+
C114F3-108A1-L_Batt_Conn
PJ2
PR9
100_4
TEMP_MBAT
TEMP_MBAT [36]
PR12
100K_4
+3VPCU
PC5
47p/50V_6
PC6
47p/50V_6
PR8
*Short_4
PR11
100_4
PR10
100_4
MBCLK [36]
MBDATA [36]
PR21
2.21K/F_4
PC14
0.01u/50V_6
PC10
*1u/16V_6
PC12
0.01u/50V_6
PC13
*0.01u/50V_6
ICMNT
ICMNT [36]
ISL88731 thermal pad
tie to Pin12
PU1
CM1293A-04SO
CH1
CH4
VN
VP
CH2
CH3
TEMP_MBAT
MBDATA
+3VPCU
MBCLK
Add ESD diode base on EC FAE suggestion
Quanta Computer Inc.
PROJECT : ZRD
Size
Document Number
Charger(ISL88731A)
Rev
1C
Date: Wednesday, July 21, 2010
Sheet 37 of 46

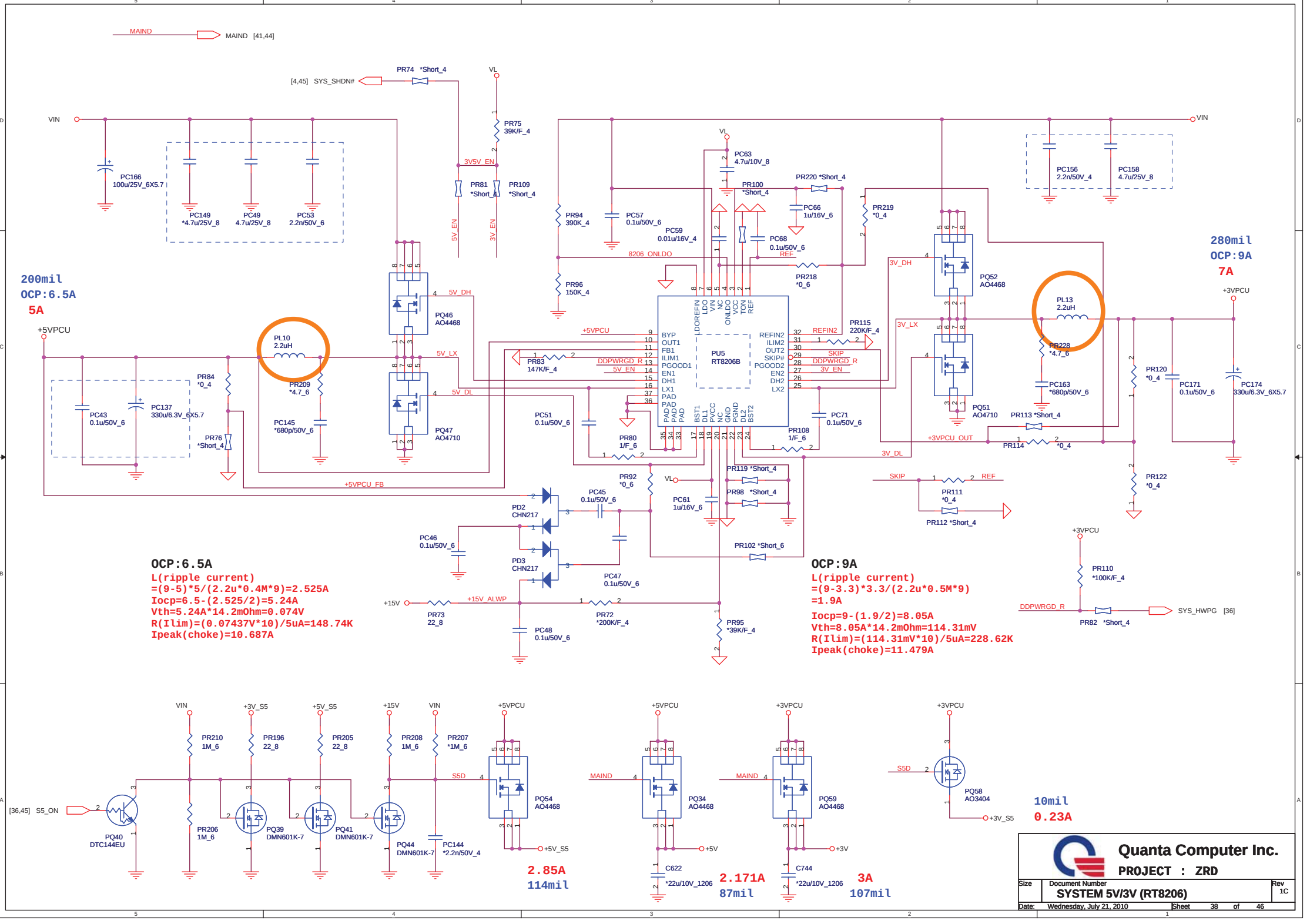
MAIND
MAIND [41,44]
[4,45] SYS_SHDN#
PR74 *Short_4
VL
PR75 39K/F_4
VIN
PC166 100u/25V_6X5.7
PC149 *4.7u/25V_8
PC49 4.7u/25V_8
PC53 2.2n/50V_6
3V5V_EN
PR81 *Short_4
PR109 *Short_4
5V_EN
3V_EN
PC63 4.7u/10V_8
PR100 *Short_4
PR220 *Short_4
PC66 1u/16V_6
PR219 *0_4
PC156 2.2n/50V_4
PC158 4.7u/25V_8
PR94 390K_4
PC57 0.1u/50V_6
PC59 0.01u/16V_4
PC68 0.1u/50V_6
8206_ONLDO
REF
PR218 *0_6
PR96 150K_4
3V_DH
PQ52 AO4468
PQ51 AO4710
3V_LX
PL13 2.2uH
PR228 *4.7_6
PC163 *680p/50V_6
PR113 *Short_4
PR114 *0_4
+3VPCU_OUT
3V_DL
PR115 220K/F_4
REFIN2
SKIP
DDPWRGD_R
3V_EN
PU5 RT8206B
BYP
OUT1
FB1
ILIM1
PGOOD1
EN1
DH1
LX1
PAD
LDOREFIN
LDO
VIN
NC
ONLDO
VCC
TON
REF
REFIN2
ILIM2
OUT2
SKIP#
PGOOD2
EN2
DH2
LX2
BST1
DL1
PVCC
NC
GND
PGND
DL2
BST2
+5VPCU
PR83 147K/F_4
DDPWRGD_R
5V_EN
5V_DH
5V_LX
5V_DL
PQ46 AO4468
PQ47 AO4710
PL10 2.2uH
PR209 *4.7_6
PR84 *0_4
PC43 0.1u/50V_6
PC137 330u/6.3V_6X5.7
PR76 *Short_4
PC145 *680p/50V_6
PC51 0.1u/50V_6
PR80 1/F_6
PC71 0.1u/50V_6
PR108 1/F_6
+5VPCU_FB
PR92 *0_6
PC45 0.1u/50V_6
PC61 1u/16V_6
PR119 *Short_4
PR98 *Short_4
PR102 *Short_6
PD2 CHN217
PD3 CHN217
PC46 0.1u/50V_6
PC47 0.1u/50V_6
+15V
PR73 22_8
+15V_ALWP
PR72 *200K/F_4
PC48 0.1u/50V_6
PR95 *39K/F_4
SKIP
REF
PR111 *0_4
PR112 *Short_4
PR120 *0_4
PC171 0.1u/50V_6
PC174 330u/6.3V_6X5.7
PR122 *0_4
+3VPCU
PR110 *100K/F_4
DDPWRGD_R
PR82 *Short_4
SYS_HWPG [36]
200mil
OCP:6.5A
5A
280mil
OCP:9A
7A
OCP:6.5A
L(ripple current)
=(9-5)*5/(2.2u*0.4M*9)=2.525A
Iocp=6.5-(2.525/2)=5.24A
Vth=5.24A*14.2mOhm=0.074V
R(Ilim)=(0.07437V*10)/5uA=148.74K
Ipeak(choke)=10.687A
OCP:9A
L(ripple current)
=(9-3.3)*3.3/(2.2u*0.5M*9)
=1.9A
Iocp=9-(1.9/2)=8.05A
Vth=8.05A*14.2mOhm=114.31mV
R(Ilim)=(114.31mV*10)/5uA=228.62K
Ipeak(choke)=11.479A
[36,45] S5_ON
PQ40 DTC144EU
PR210 1M_6
PR206 1M_6
+3V_S5
PR196 22_8
PQ39 DMN601K-7
+5V_S5
PR205 22_8
PQ41 DMN601K-7
PR208 1M_6
PQ44 DMN601K-7
PR207 *1M_6
PC144 *2.2n/50V_4
S5D
PQ54 AO4468
+5V_S5
2.85A
114mil
MAIND
PQ34 AO4468
+5V
C622 *22u/10V_1206
2.171A
87mil
PQ59 AO4468
+3V
C744 *22u/10V_1206
3A
107mil
PQ58 AO3404
10mil
0.23A
Quanta Computer Inc.
PROJECT : ZRD
Size
Document Number
SYSTEM 5V/3V (RT8206)
Rev 1C
Date: Wednesday, July 21, 2010
Sheet 38 of 46

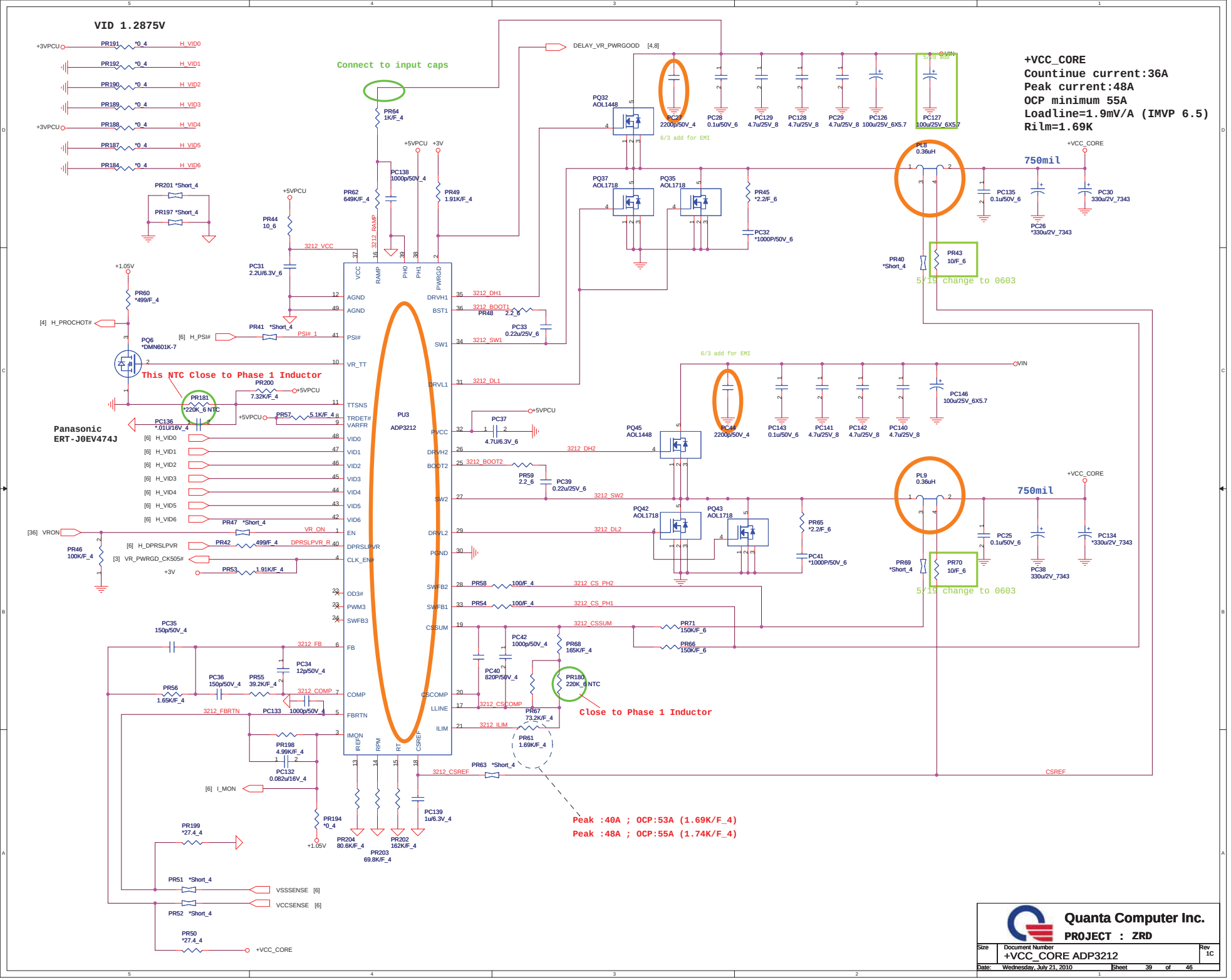
VID 1.2875V
+VCC_CORE
Countinue current:36A
Peak current:48A
OCP minimum 55A
Loadline=1.9mV/A (IMVP 6.5)
Rilm=1.69K
Connect to input caps
DELAY_VR_PWRGOOD [4,8]
PU3
ADP3212
This NTC Close to Phase 1 Inductor
Panasonic
ERT-J0EV474J
Close to Phase 1 Inductor
Peak :40A ; OCP:53A (1.69K/F_4)
Peak :48A ; OCP:55A (1.74K/F_4)
750mil
5/19 change to 0603
6/3 add for EMI
Quanta Computer Inc.
PROJECT : ZRD
Document Number
+VCC_CORE ADP3212
Rev
1C
Date: Wednesday, July 21, 2010
Sheet 39 of 46

[PWM]

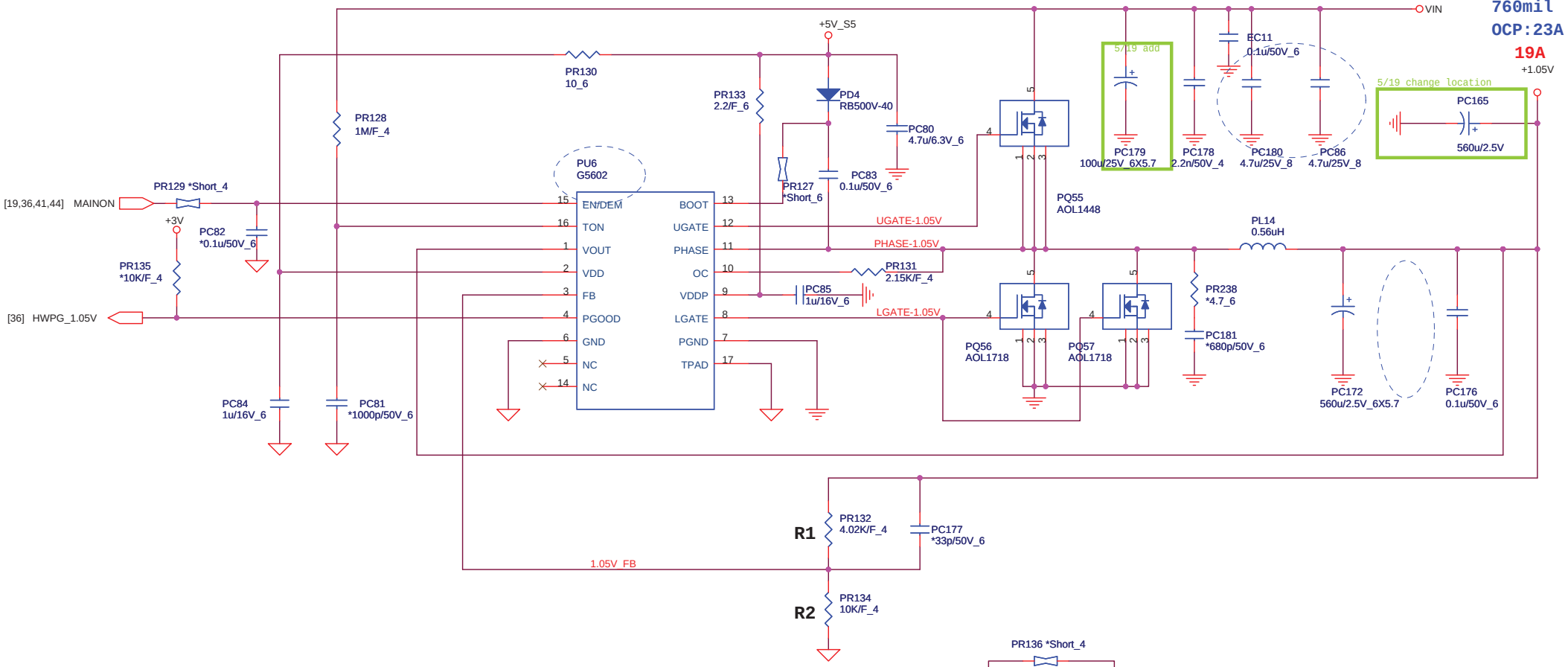

TON=3.85p*RTON*Vout/(Vin-0.5)

Frequency=Vout/(Vin*TON)

TON=3.85p*1M*1/(Vin-0.5)

Frequency=1/(0.0036767)=272K

AO1718 Rdson=3~4.3mOhm

L(ripple current)
=(19-1.05)*1.05/(0.56u*272k*19)
~6.512A

RILIM=2.15mohm*23-3.256/20uA=2.122Kohm

I(choke)peak=29.512A

Quanta Computer Inc.		
PROJECT : ZRD		
Size	Document Number: +VTT (UP6111A)	Rev 1C
Date: Wednesday, July 21, 2010	Sheet 40 of 46	

[PWM]

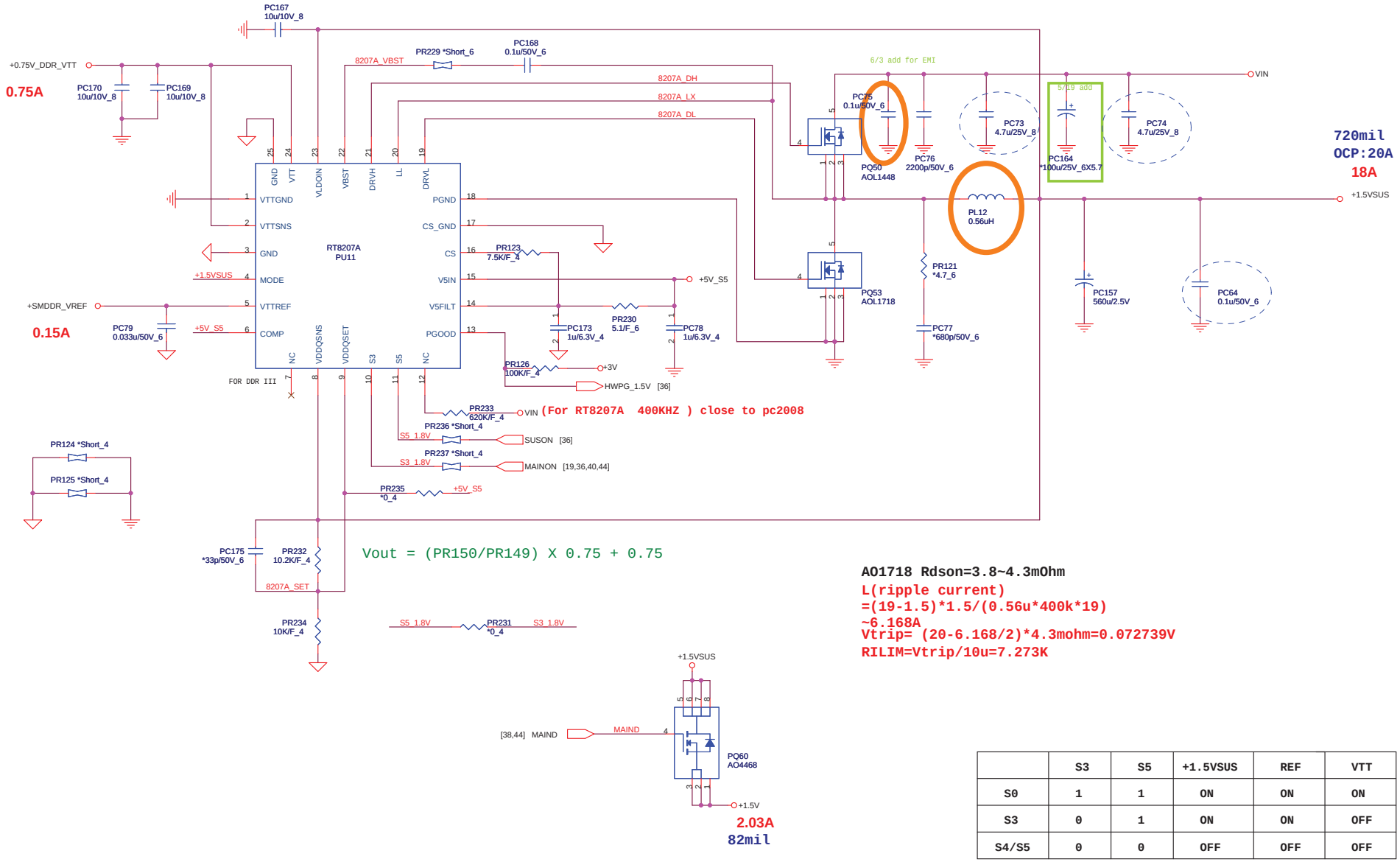

Vout = (PR150/PR149) X 0.75 + 0.75

AO1718 Rdson=3.8~4.3mOhm

L(ripple current)
=(19-1.5)*1.5/(0.56u*400k*19)
~6.168A
Vtrip= (20-6.168/2)*4.3mohm=0.072739V
RILIM=Vtrip/10u=7.273K

	S3	S5	+1.5VSUS	REF	VTT
S0	1	1	ON	ON	ON
S3	0	1	ON	ON	OFF
S4/S5	0	0	OFF	OFF	OFF

Quanta Computer Inc.
PROJECT : ZRD

Size	Document Number	Rev
	DDR 1.5V(RT8207A)	1C

Date: Wednesday, July 21, 2010 Sheet 41 of 46

Int_VGA [PWM]

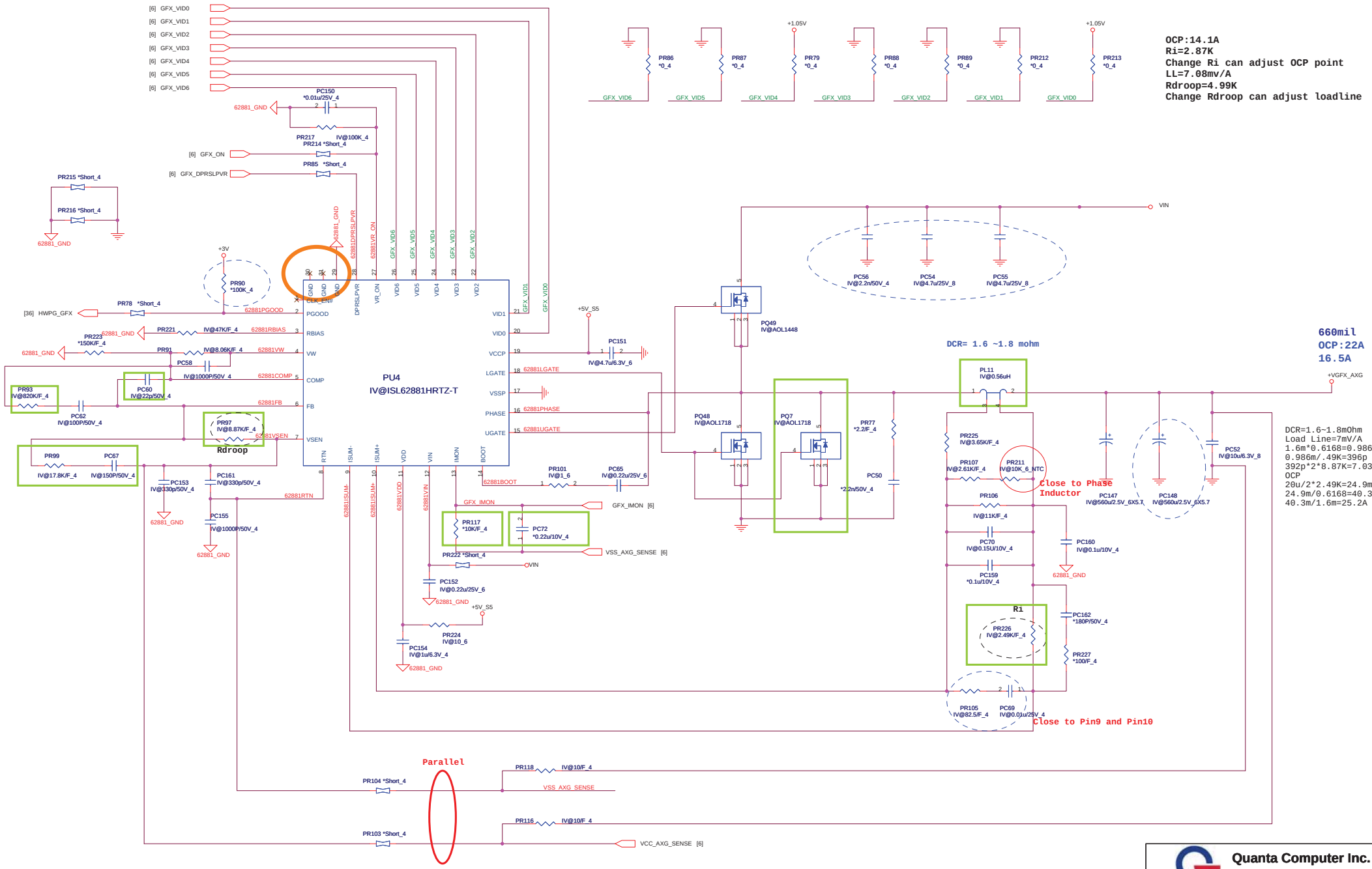

Quanta Computer Inc.

PROJECT : ZRD

Size	Document Number	Rev
	+VGFX_AXG (ISL62881)	1C

Date: Wednesday, July 21, 2010 Sheet 42 of 9

1.Level 1 Environment-related Substances Should NEVER be Used.
2.Purchase ink, paint, wire rods, and Molding resins only from the business Partners that Sony approves as Green Partners.

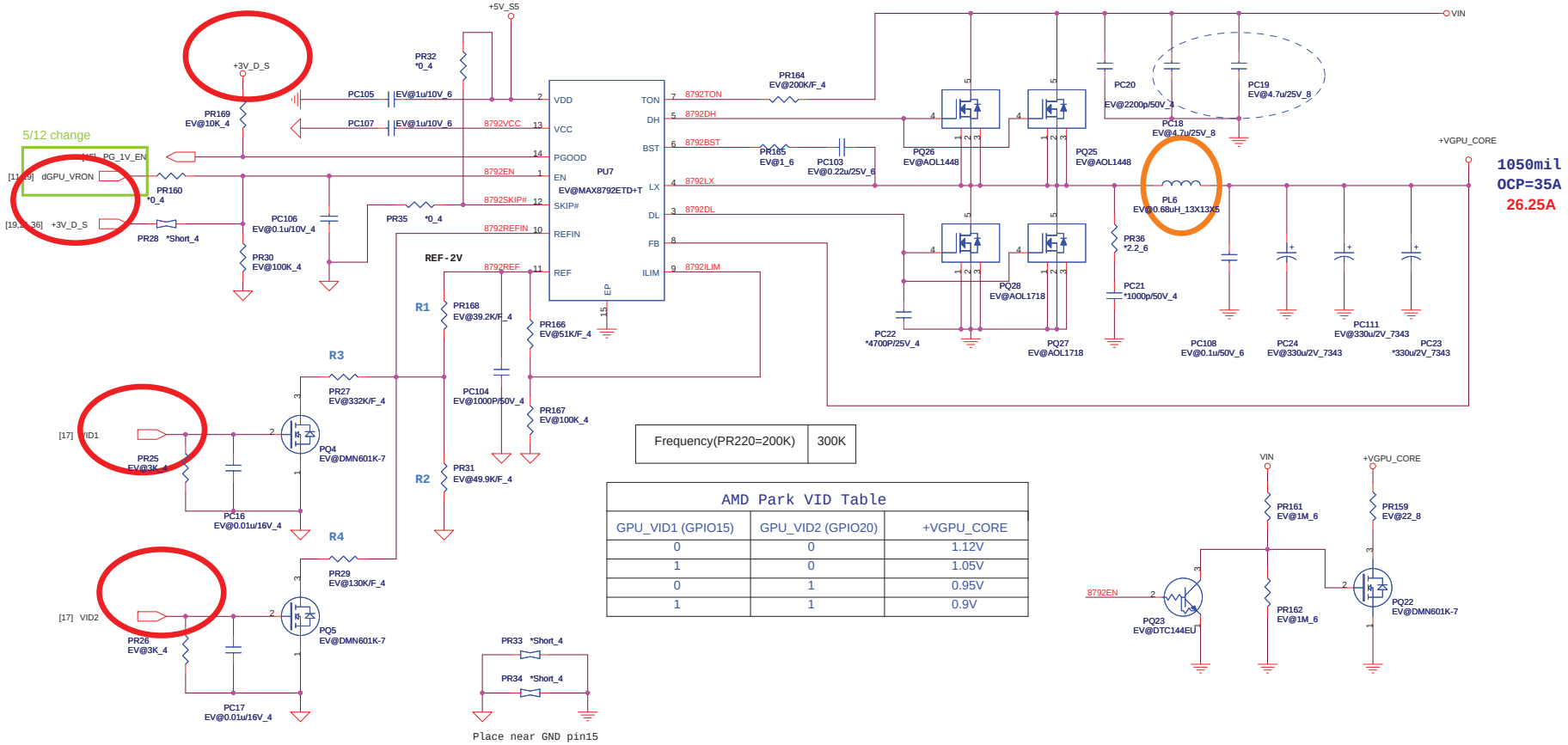

Frequency(PR220=200K)	300K

AMD Park VID Table

GPU_VID1 (GPIO15)	GPU_VID2 (GPIO20)	+VGPU_CORE
0	0	1.12V
1	0	1.05V
0	1	0.95V
1	1	0.9V

Quanta Computer Inc.

PROJECT : ZRD

Size	Document Number	Rev
	GPU CORE(MAX8792)	1C

Date: Wednesday, July 21, 2010 Sheet 43 of 9

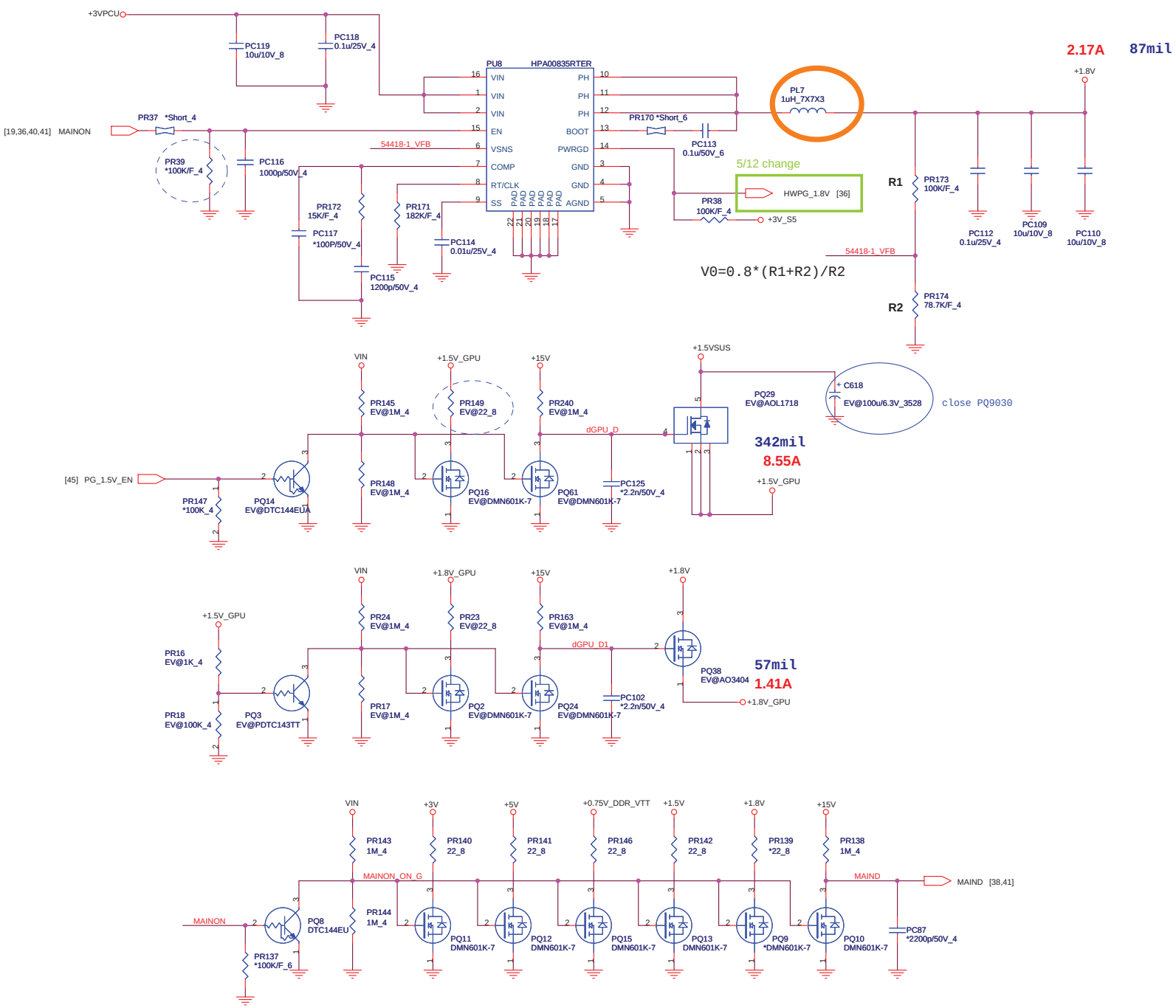

7/7 modify

Quanta Computer Inc.

PROJECT : ZRD

Size	Document Number	Rev
	Discharge/1.8V)	1C

Date: Wednesday, July 21, 2010 Sheet 44 of 46

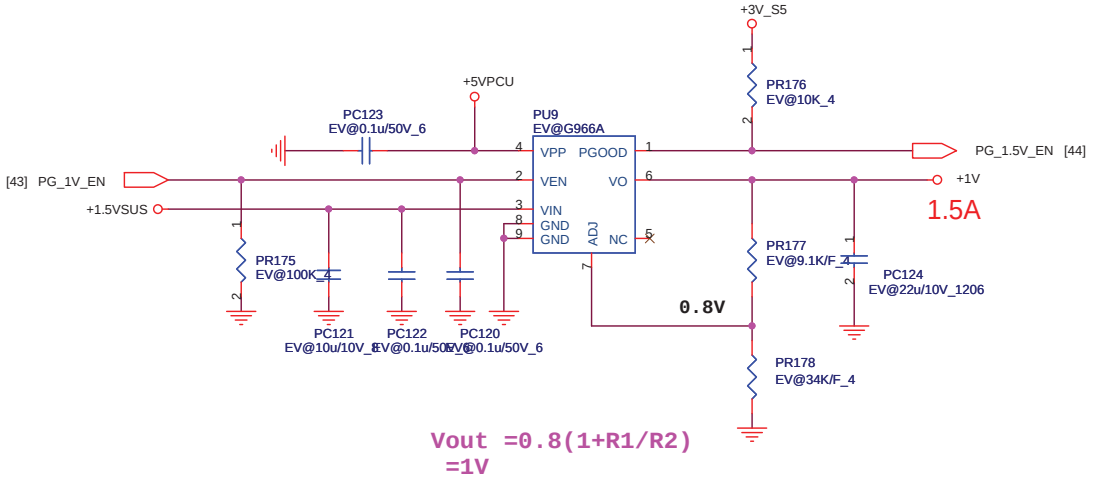

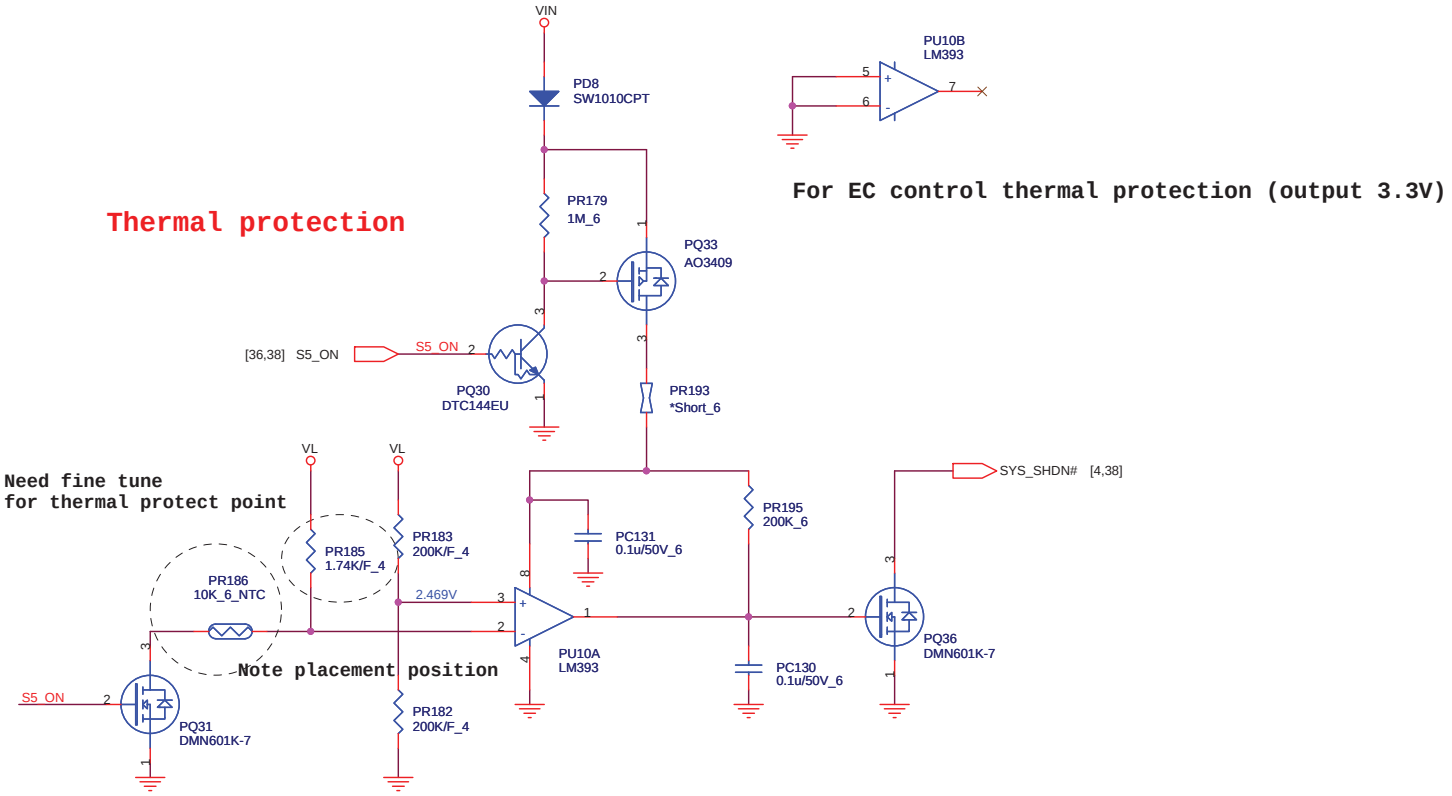

Quanta Computer Inc.

PROJECT : ZRD

Size	Document Number	Rev
		1C

Date: Wednesday, July 21, 2010 Sheet 45 of 46

CHANGE LIST

Model	REV	CHANGE LIST
ZRD MB	1A	FIRST RELEASED
	2A	Page 3 : Unstuff L54 & stuff R586 & change U31 P/N for 3V CLK gen and Switch CLK_BUF_DREFSSCLK and CLK_BUF_PCIE_3GPLL Page 4 : Q16 Change P/N for EOD part & short R116 (Del.) for 0 ohm Page 8 : Short R244 (Del.) for 0 ohm Page 10 :Short R243 (Del.) for 0 ohm Page 12 :Short R189 ,R190 & R534 (Del.) for 0 ohm & C655 change P/N for EOD part Page 14 :Del. R268 & R247 for M3 solution & stuff R269 ,R229 ,R223 & R226 for M1 solution,Stuff C372 for +1.5VSUS leakage Page 15 :Stuff C459 for +1.5VSUS leakage Page 25 :Q12 ,Q17 & Q18 Change P/N for ESD , CN10 Change P/N ,Q14.2 & Q13.2 Change from +5V to +3V Page 27 :C339 & C391 of footprint Change from 0805 to 0402 for ESD Page 28 :Unstuff R566 ,R294 ,R284 ,R279 ,R276 ,R273 ,R272 for disable debug card function Page 29 :C393 & C254 Change P/N for EOD , CN11 Change footprint for ME design request. Page 30 :U13 Change AMP circuit Page 31 :Q22 & Q23 Change P/N for EOD part. Page 34 :Del. L55 , CN12 Change P/N Page 36 :C27 Change P/N for EOD part Page All : Change to short pad : Location : R458 ,R452 ,R537 ,R533 ,R144 ,R155 ,R191 ,R140 ,R201 ,R224 ,R461 ,R136 ,R197 ,R206 ,R219 ,R212 ,R166 ,R174 ,R188 ,R202 ,R209 ,R184 ,R168 ,R185 ,R448 ,R447 ,R5 ,R10 ,R9 ,R6 ,R263 ,R288 ,R544 ,R436 ,R563 ,R570 ,R569 ,R584 ,R299 ,C738 ,R311 ,R585 ,R583 ,R571 ,R582 ,R575 ,R576 ,R579 ,R333 ,R352 ,R331 ,R332 & R349
	3A	
	3C	

MODEL	ZRD	
	FROM	To
	X	1A
	X	1A
	1A	2A
	1A	2A
	1A	2A
	1A	2A
	1A	2A
	1A	2A
	1A	2A
	1A	2A
	1A	2A
	1A	2A
	1A	2A
	1A	2A
	1A	2A
	1A	2A
	1A	2A
	1A	2A
	1A	2A
	1A	2A
	1A	2A
	1A	2A
	1A	2A
	1A	2A
	1A	2A
	1A	2A
	1A	2A
	2A	3A
	2A	3A
	2A	3A
	2A	3A
	2A	3A
	2A	3A
	2A	3A
	2A	3A
	2A	3A
	2A	3A
	2A	3A
	2A	3A
	2A	3A
	2A	3A
	2A	3A
	2A	3A
	2A	3A
	2A	3A
	2A	3A
	2A	3A
	2A	3A
	2A	3A
	2A	3A
	2A	3A
	2A	3A
	2A	3A
	2A	3A
	2A	3A
	2A	3A
	2A	3A
	2A	3A
	2A	3A
	3A	3B
	3A	3B
	3A	3B
	3A	3B
	3A	3B
	3A	3B
	3A	3B
	3A	3B
	3A	3B
	3A	3B
	3A	3B
	3A	3B
	3A	3B
	3A	3B
	3A	3B
	3A	3B
	3A	3B
	3A	3B
	3A	3B
	3A	3B
	3A	3B
	3A	3B
	3A	3B
	3A	3B
	3A	3B
	3A	3B
	3A	3B
	3A	3B
	3A	3B